HORIZONTAL MOUNT

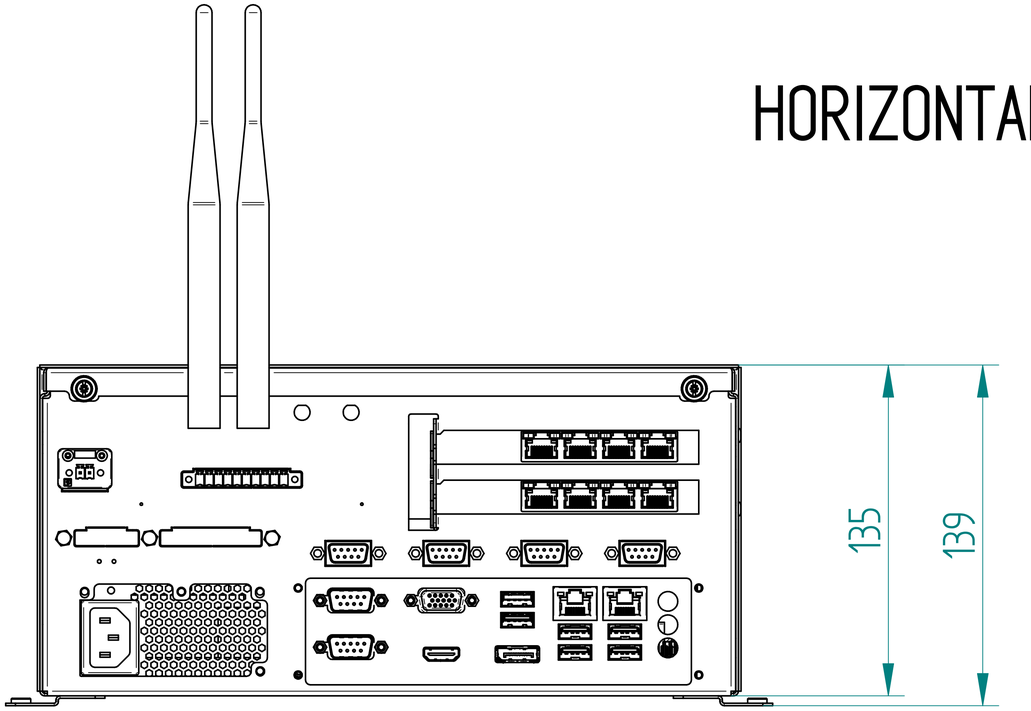

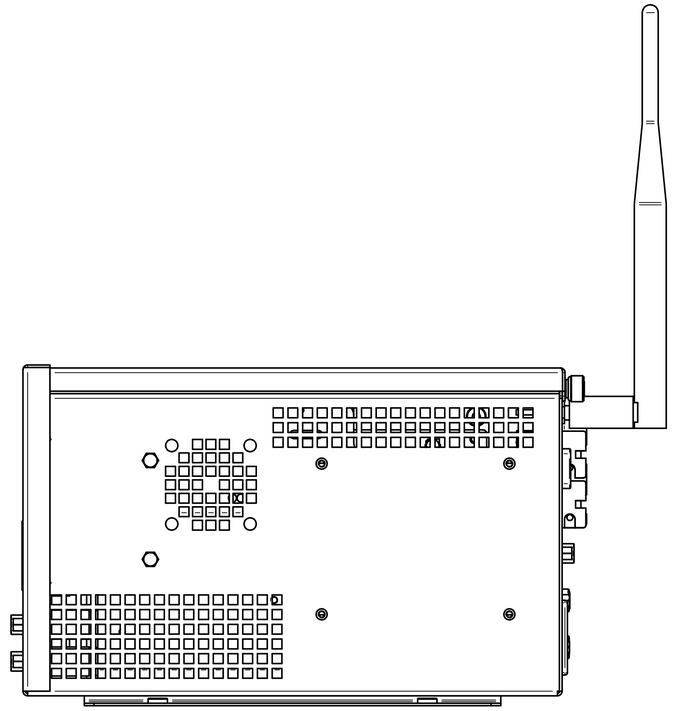

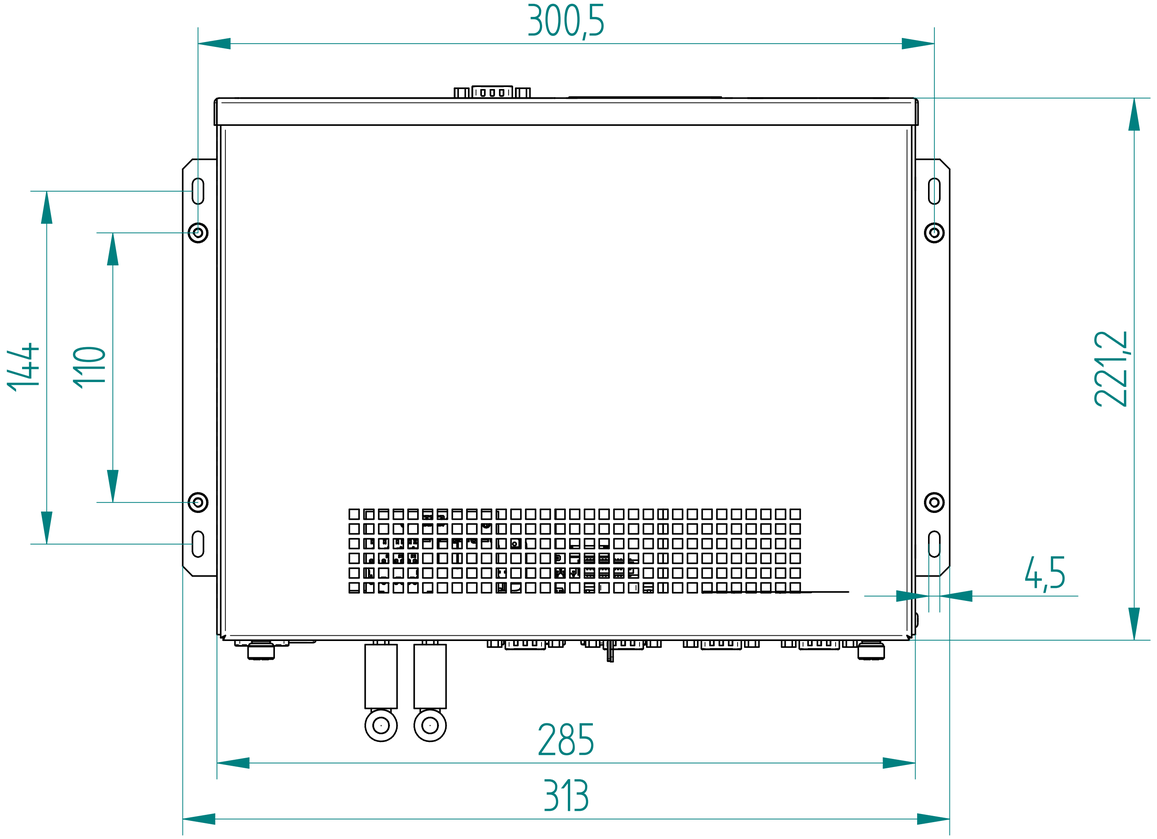

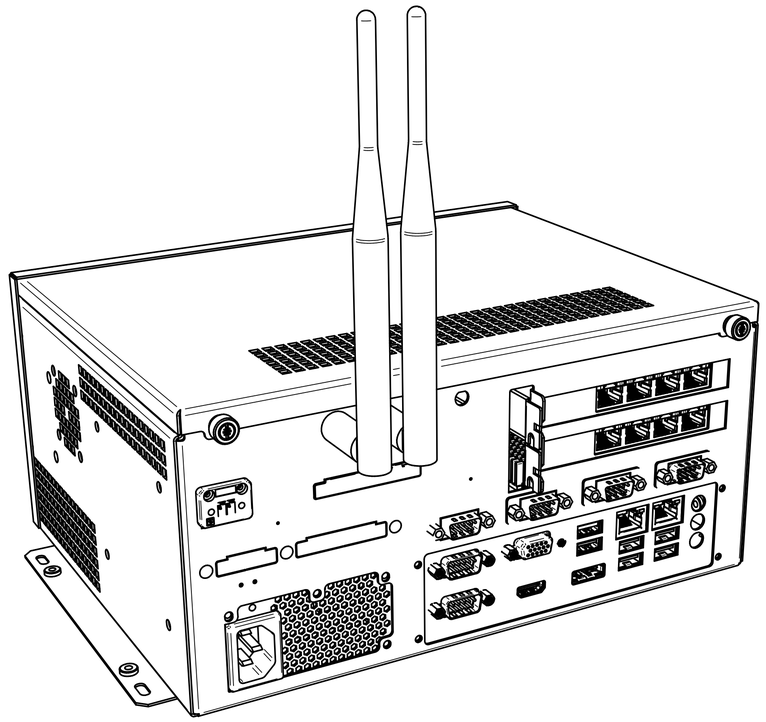

ELMAK INDUSTRIAL AUTOMATION TECHNOLOGY

Elmak srl
Via SS. Grisante e Daria, 70
42124 - Reggio Emilia - Italy

VIEW TYPE Horizontal mounting

MACHINE NAME WMT300

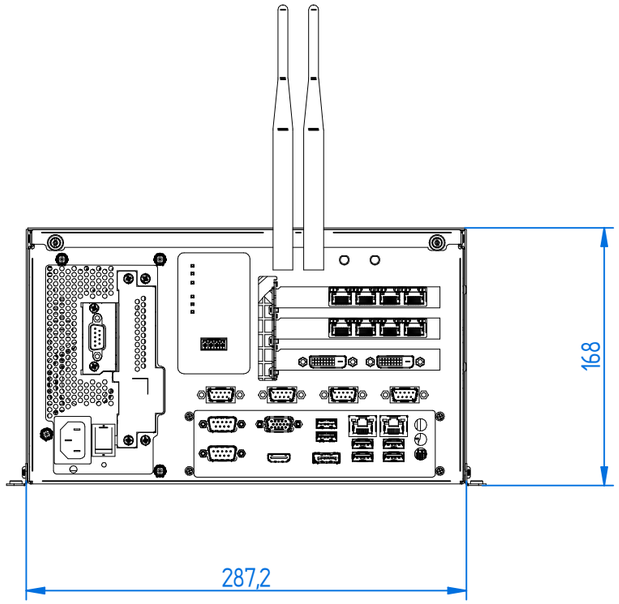

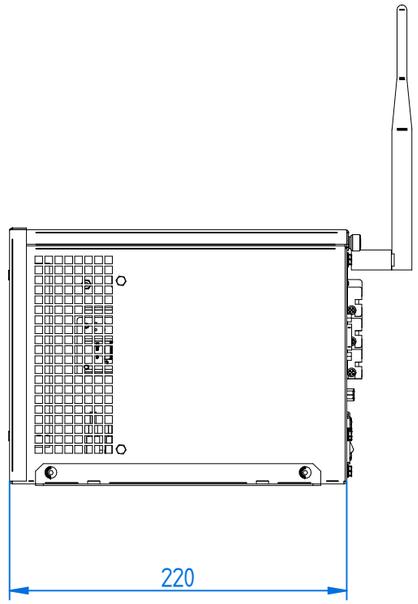

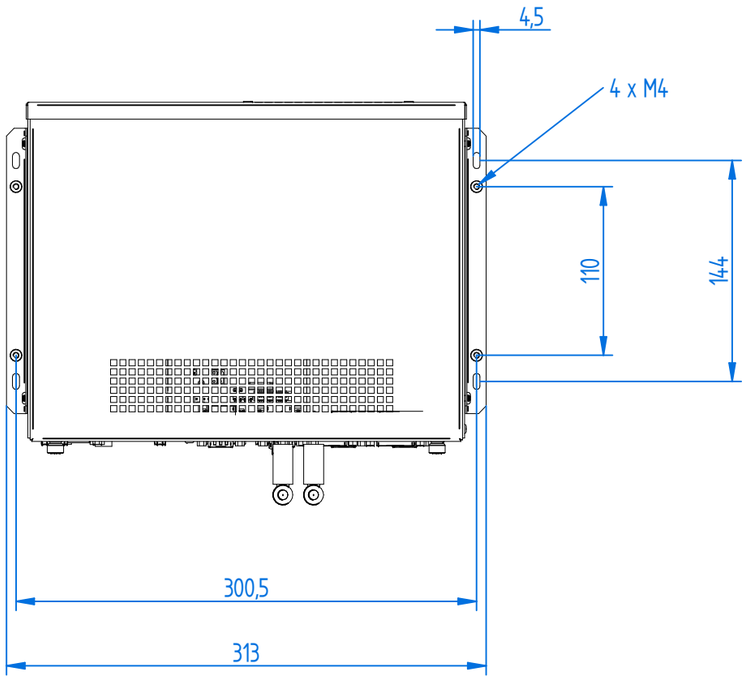

ELMAK
INDUSTRIAL AUTOMATION TECHNOLOGY
Elmak srl
Via SS. Grisante e Daria, 70
42124 - Reggio Emilia - Italy

MODEL WMT301

VERSION STD SLIM

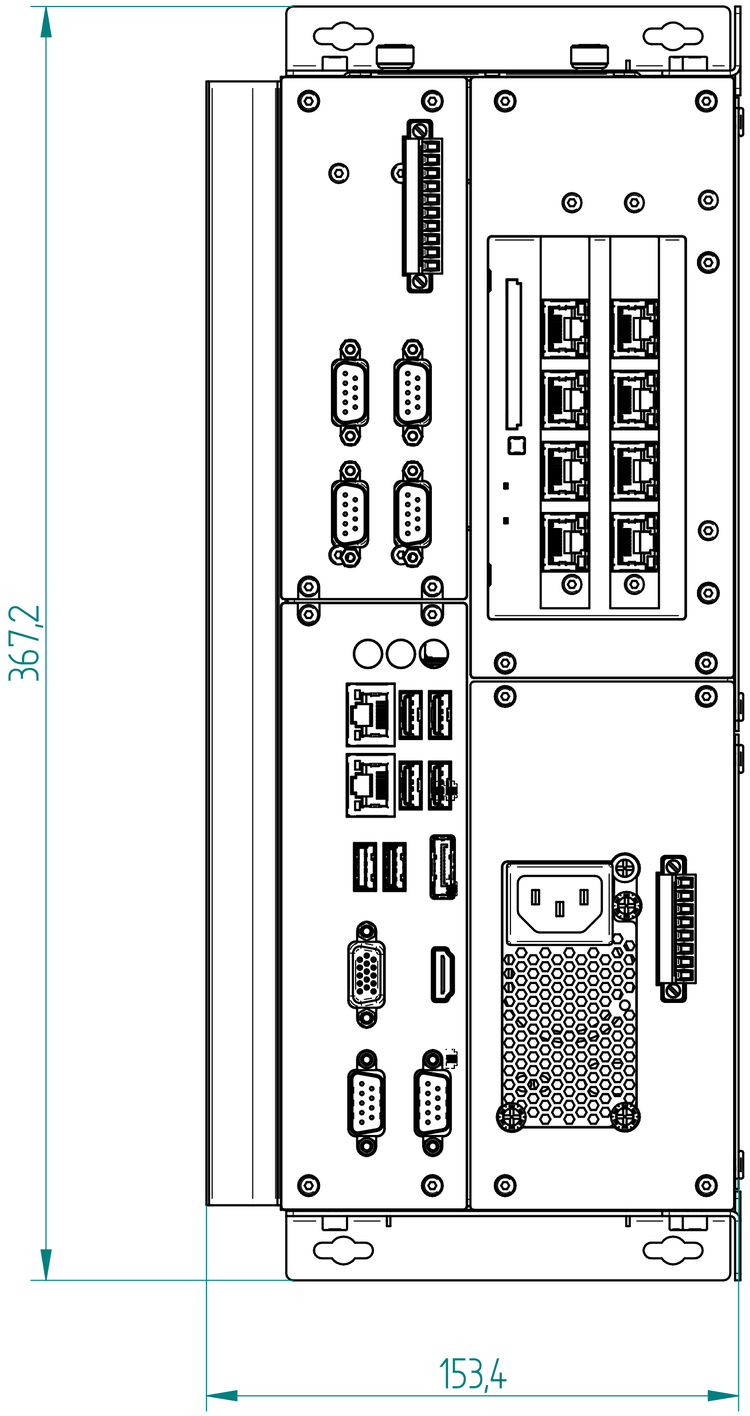

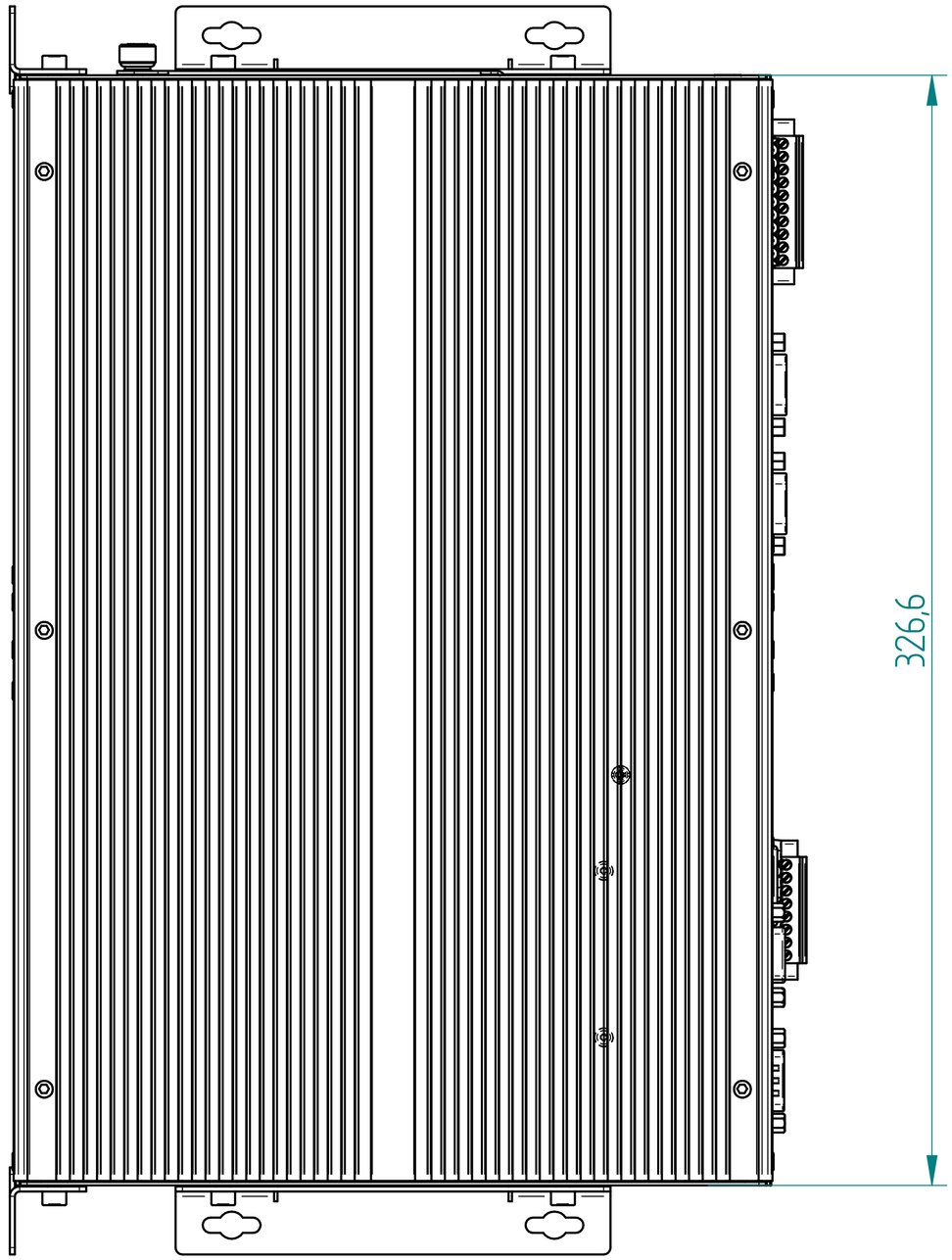

Elmak srl
Via Luigi Barchi 1/A - 42124 - Reggio Emilia - Italy

VIEW TYPE	STANDARD
MACHINE NAME	WMT 310

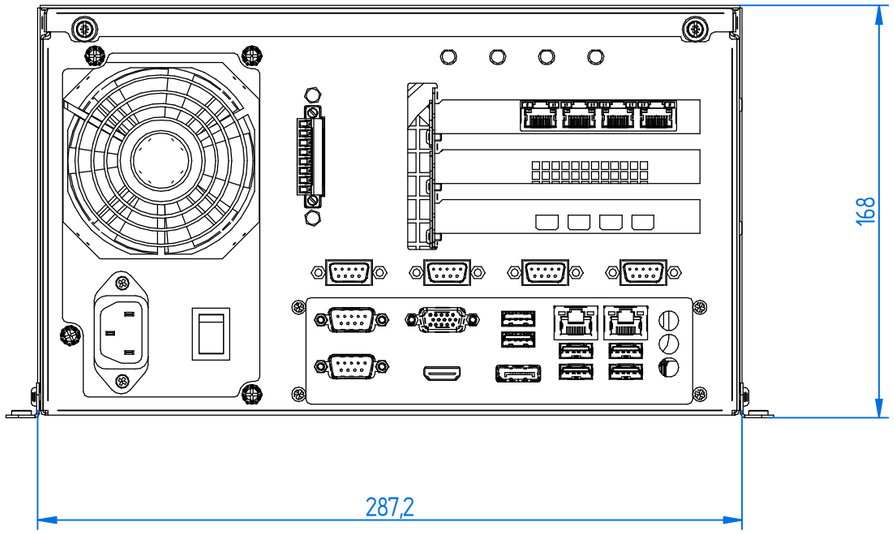

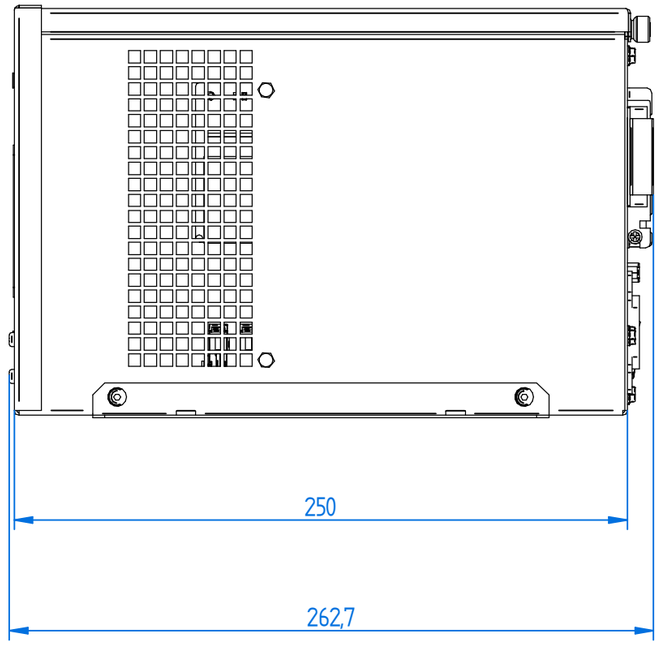

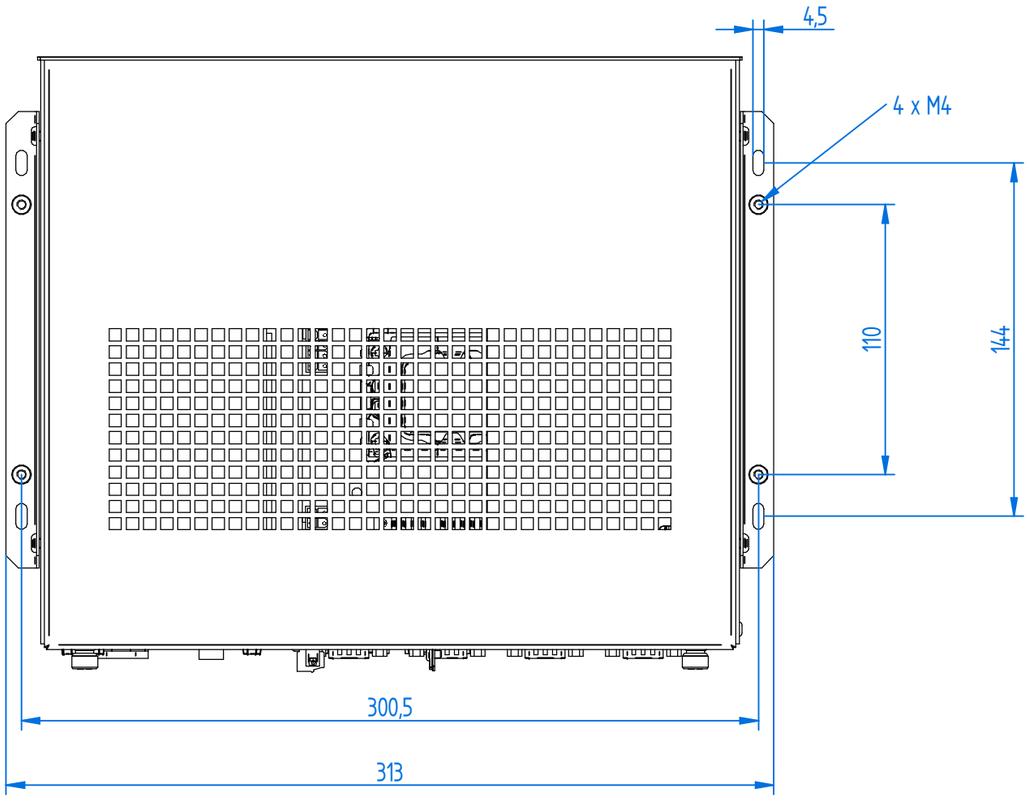

ELMAK INDUSTRIAL AUTOMATION TECHNOLOGY

Elmak srl
Via SS. Grisante e Daria, 70
42124 - Reggio Emilia - Italy

MODEL WMT330

VERSION BB