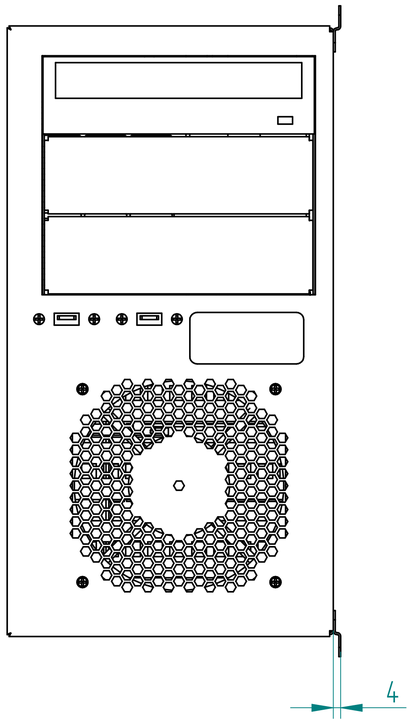

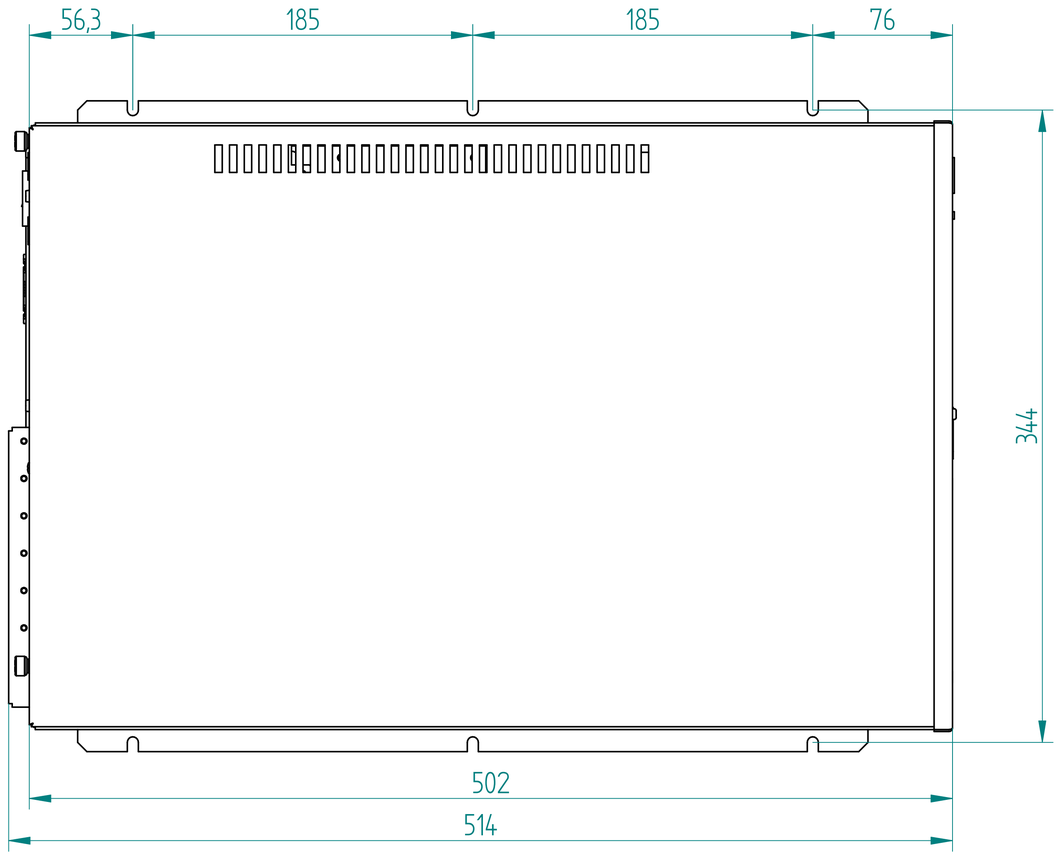

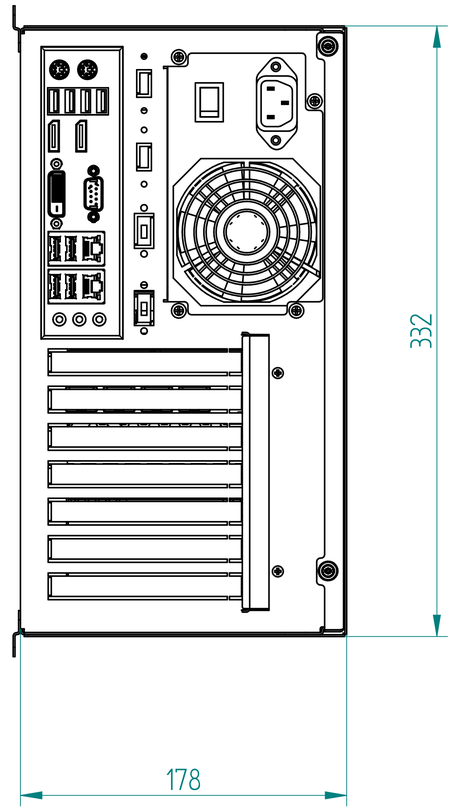

ELMAK
INDUSTRIAL AUTOMATION TECHNOLOGY

Elmak srl
Via Luigi Barchi 1/A - 42124 - Reggio Emilia - Italy

VIEW TYPE STANDARD

MACHINE NAME WMT100

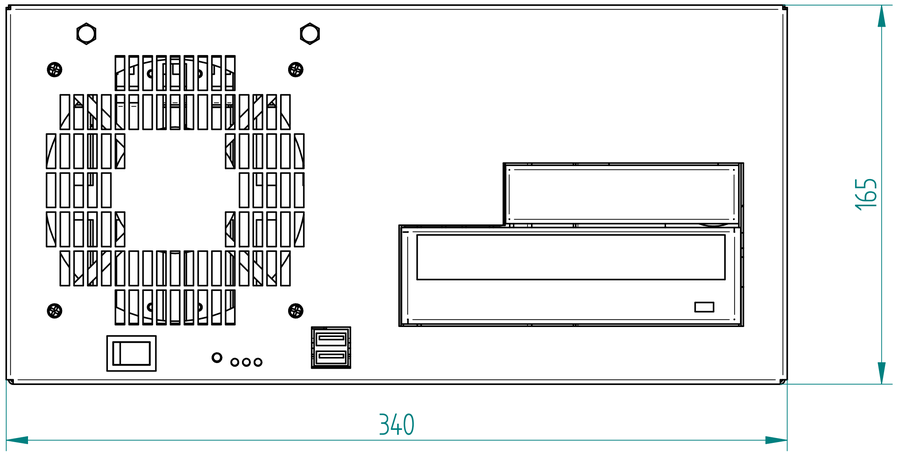

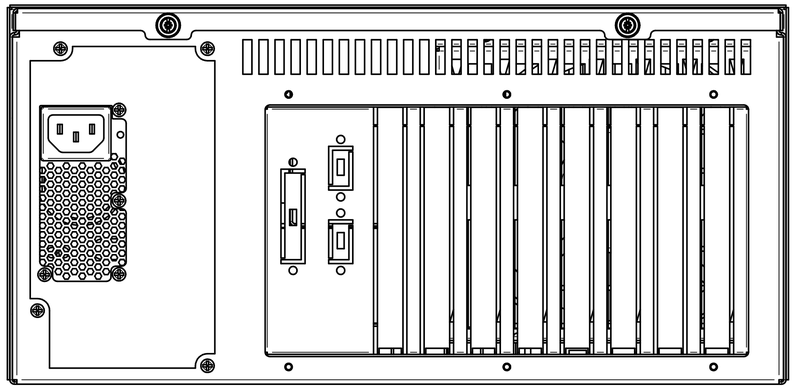

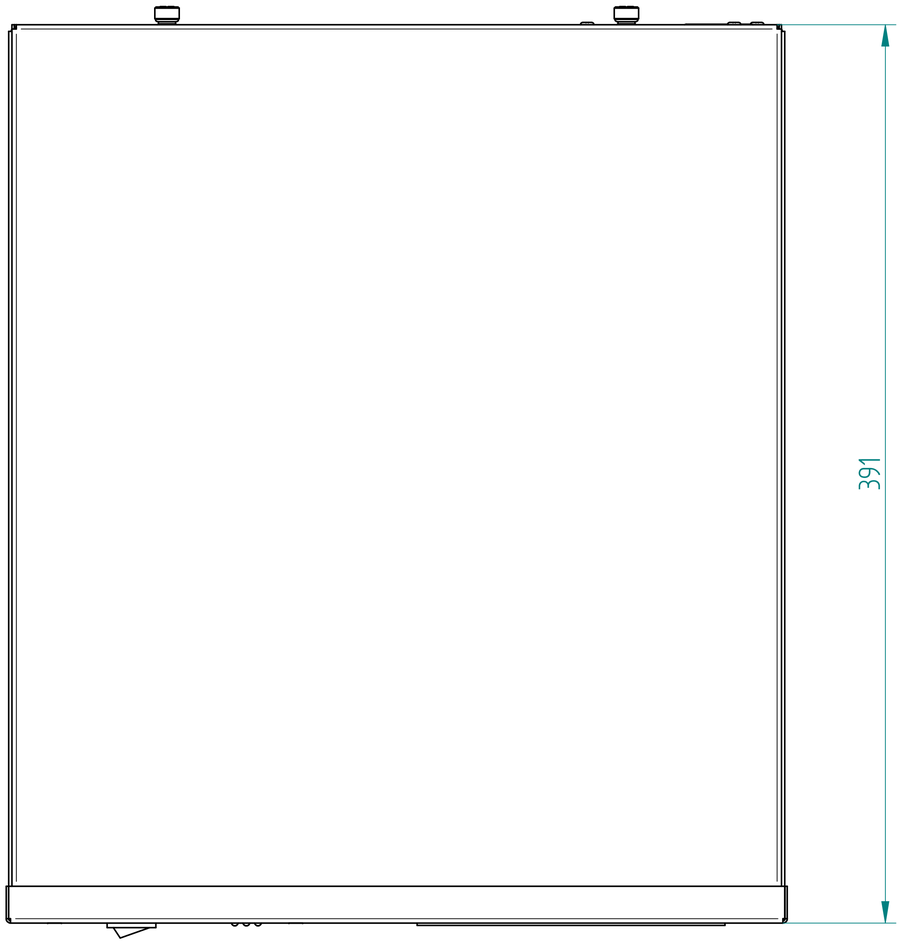

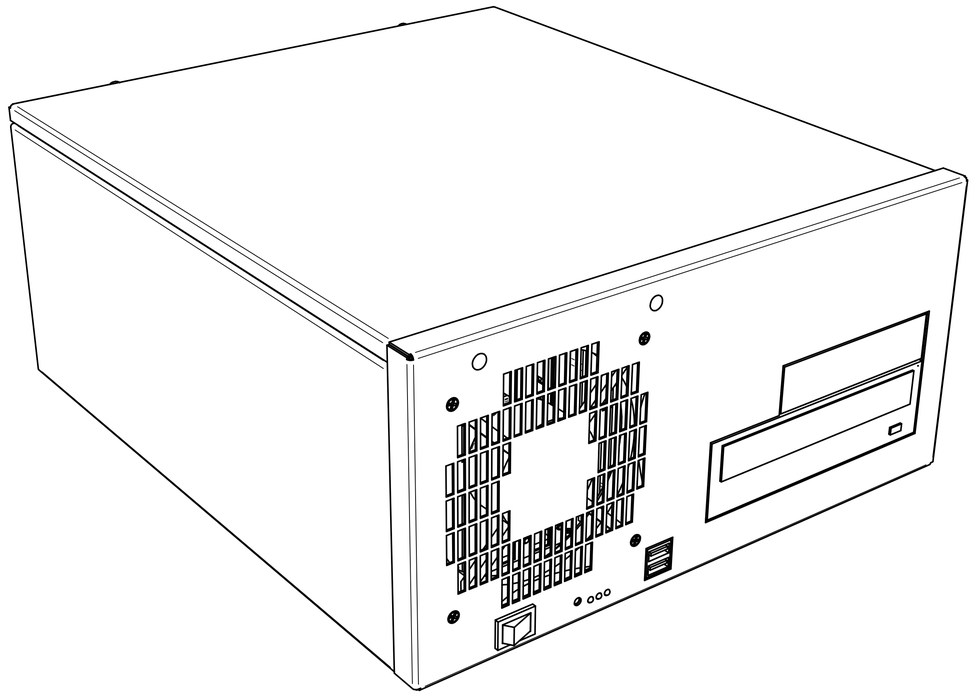

ELMAK
INDUSTRIAL AUTOMATION TECHNOLOGY

Elmak srl
Via Luigi Barchi 1/A - 42124 - Reggio Emilia - Italy

VIEW TYPE STANDARD

MACHINE NAME

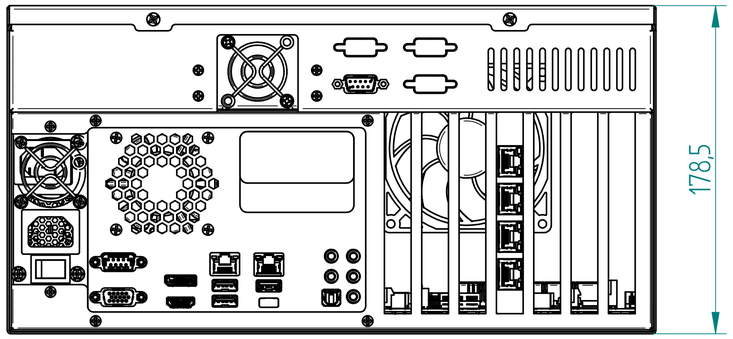

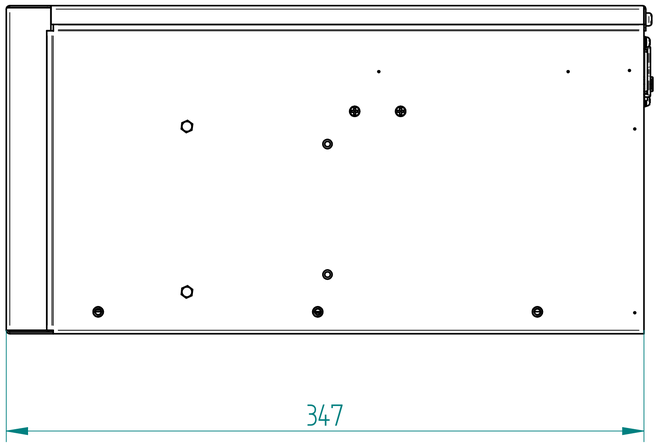

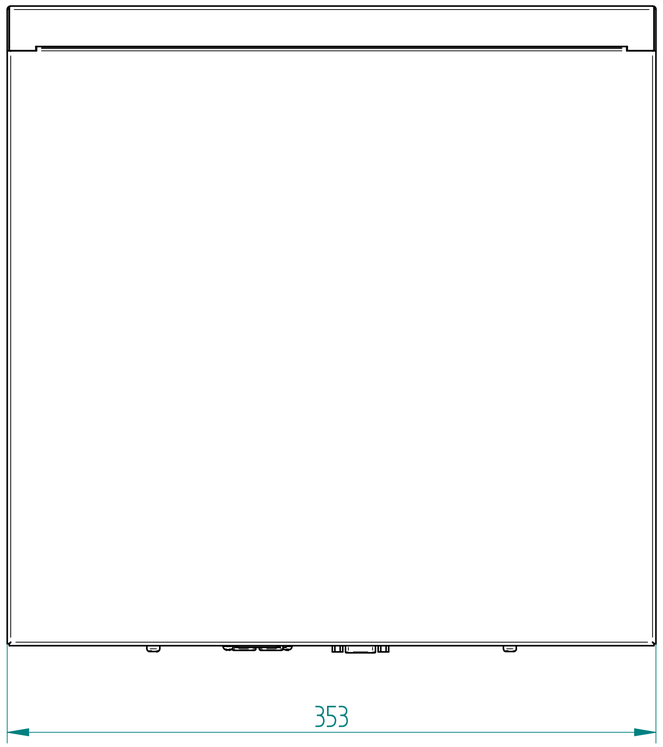

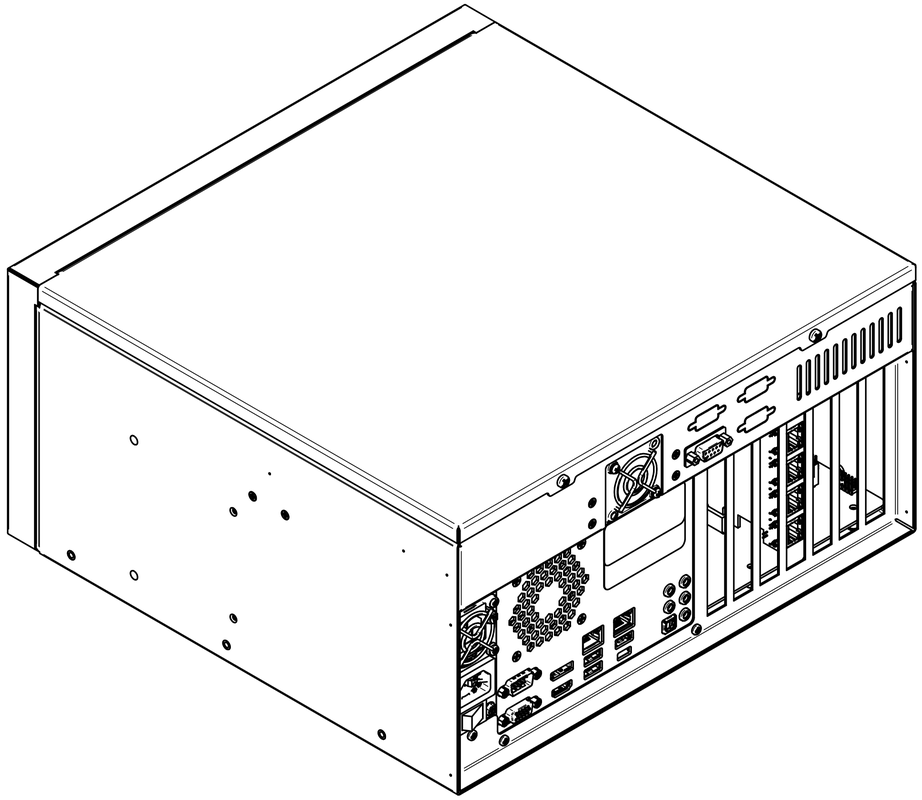

Elmak srl
Via Luigi Barchi 1/A - 42124 - Reggio Emilia - Italy

VIEW TYPE	STANDARD
MACHINE NAME	WMT 133

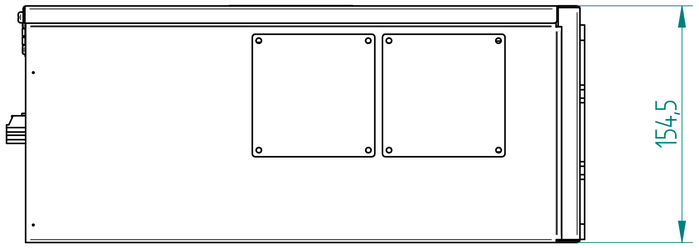

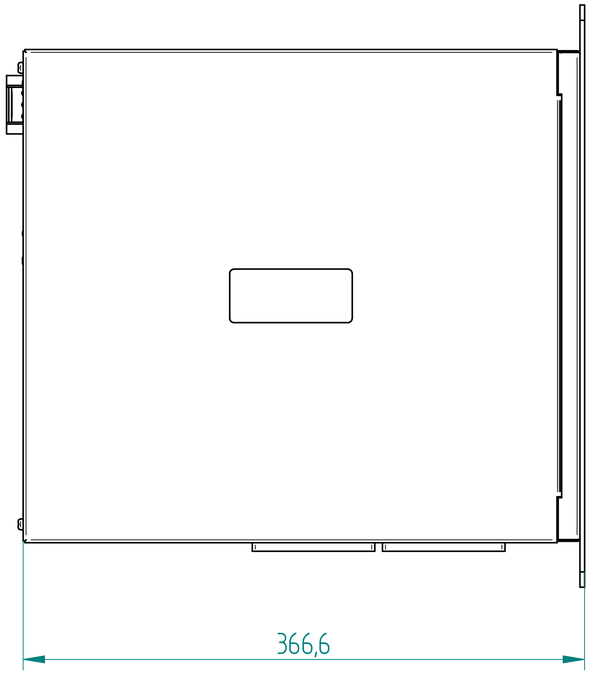

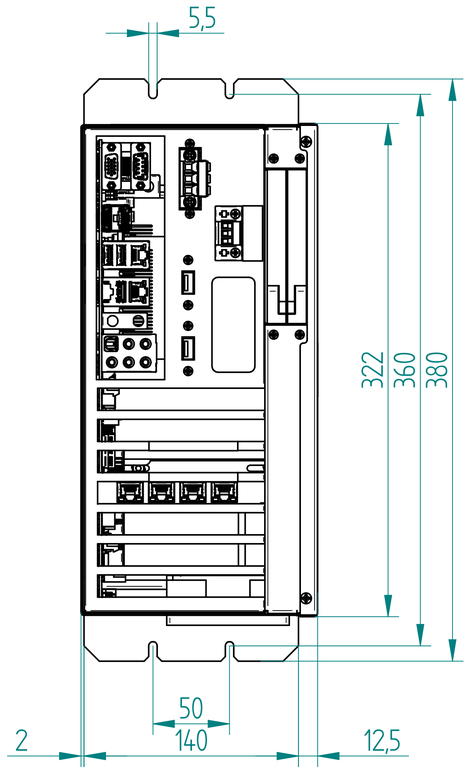

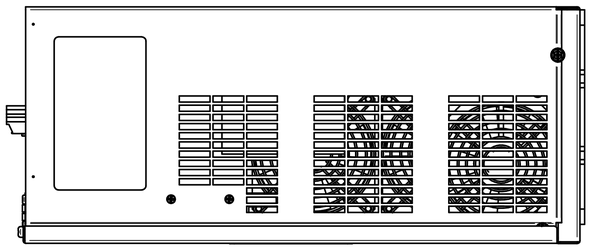

Elmak srl
Via Luigi Barchi 1/A - 42124 - Reggio Emilia - Italy

VIEW TYPE	DIMENSIONI MECCANICHE
MACHINE NAME	WMT 135

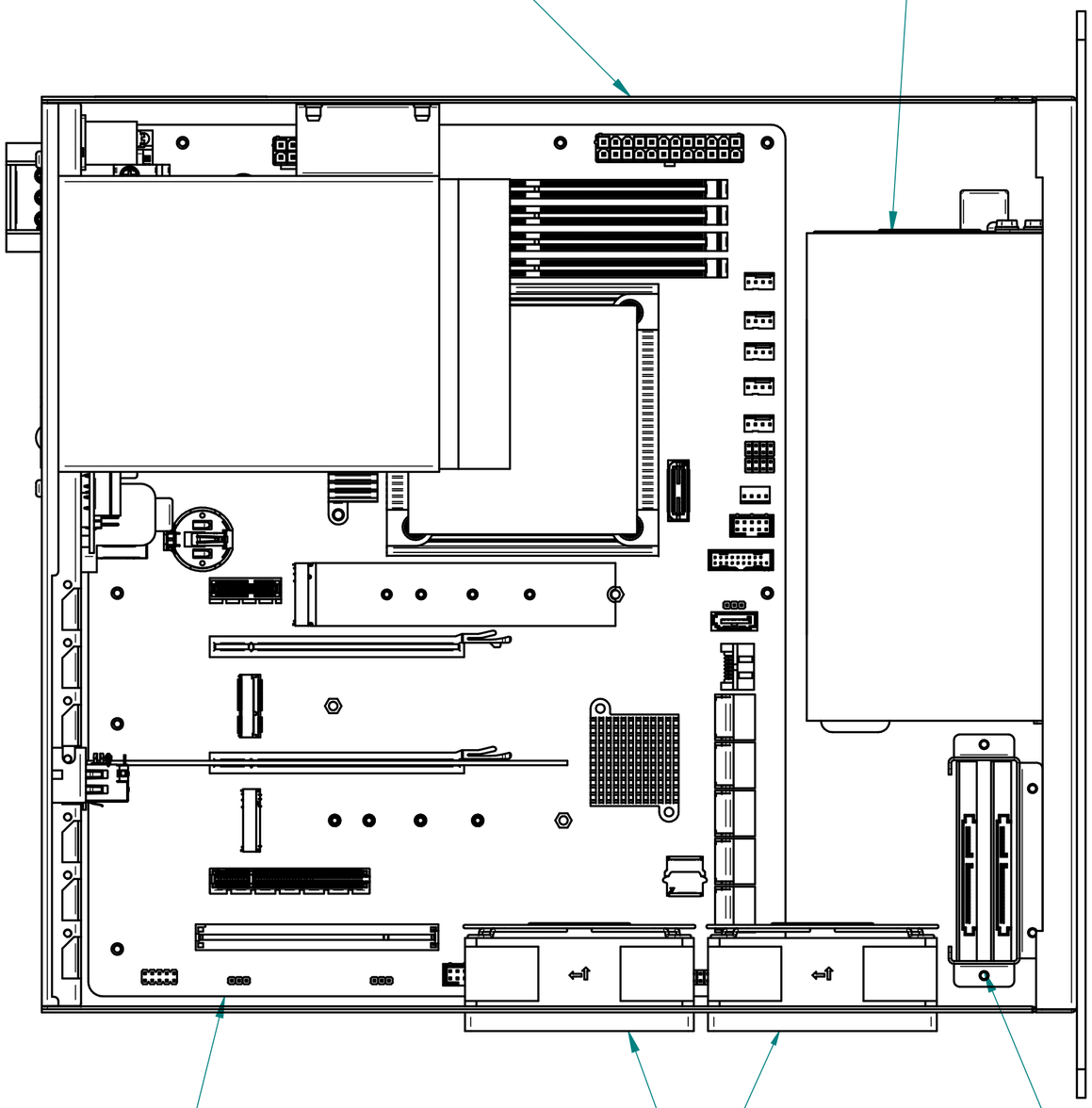

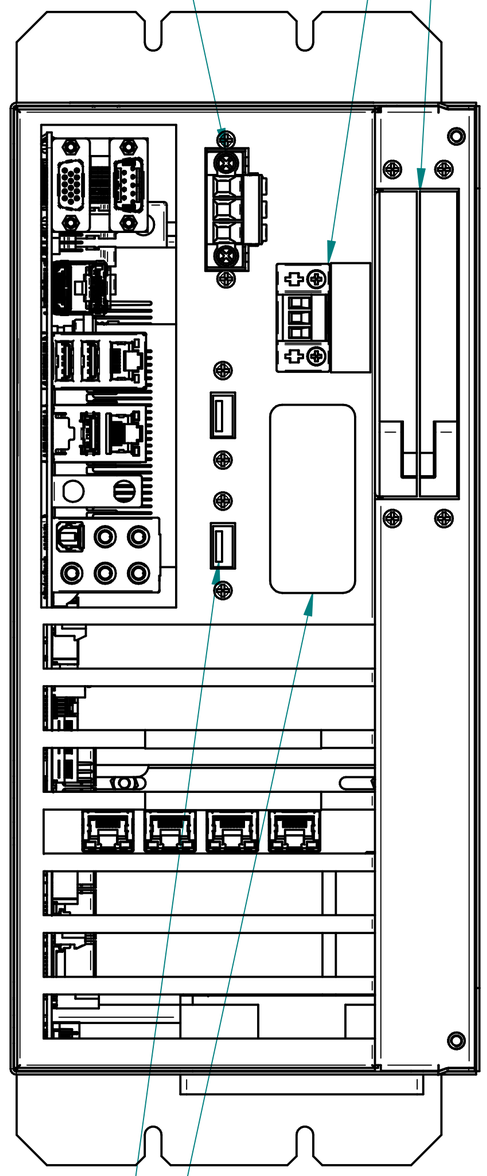

Elmak srl
Via Luigi Barchi 1/A - 42124 - Reggio Emilia - Italy

VIEW TYPE	CARATTERISTICHE
MACHINE NAME	WMT 135

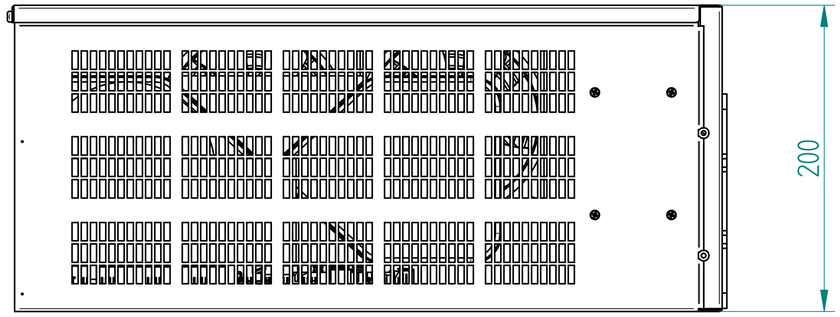

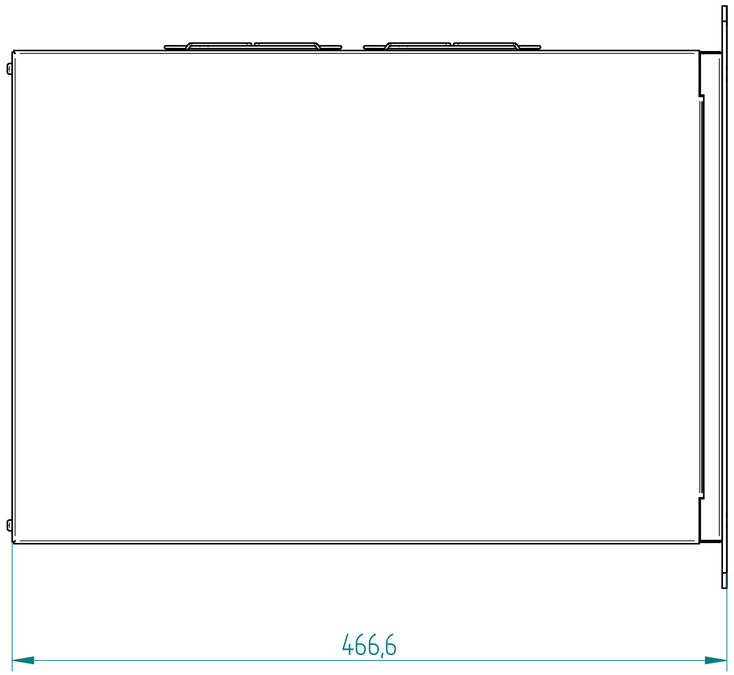

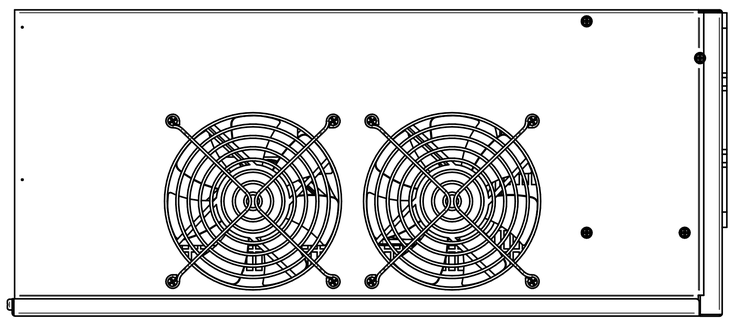

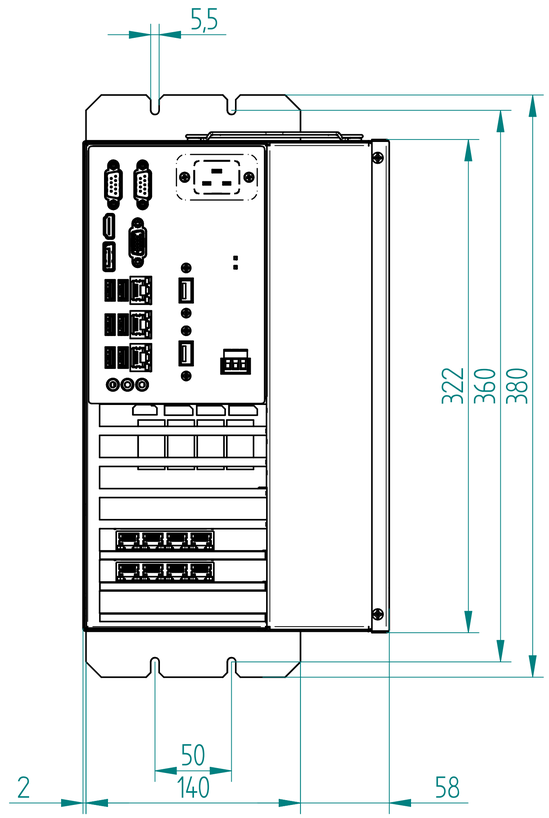

ELMAK
INDUSTRIAL AUTOMATION TECHNOLOGY

Elmak srl
Via Luigi Berchi 9/A - 42124 - Reggio Emilia - Italy

VIEW TYPE DIMENSIONI MECCANICHE

MACHINE NAME WMT 136

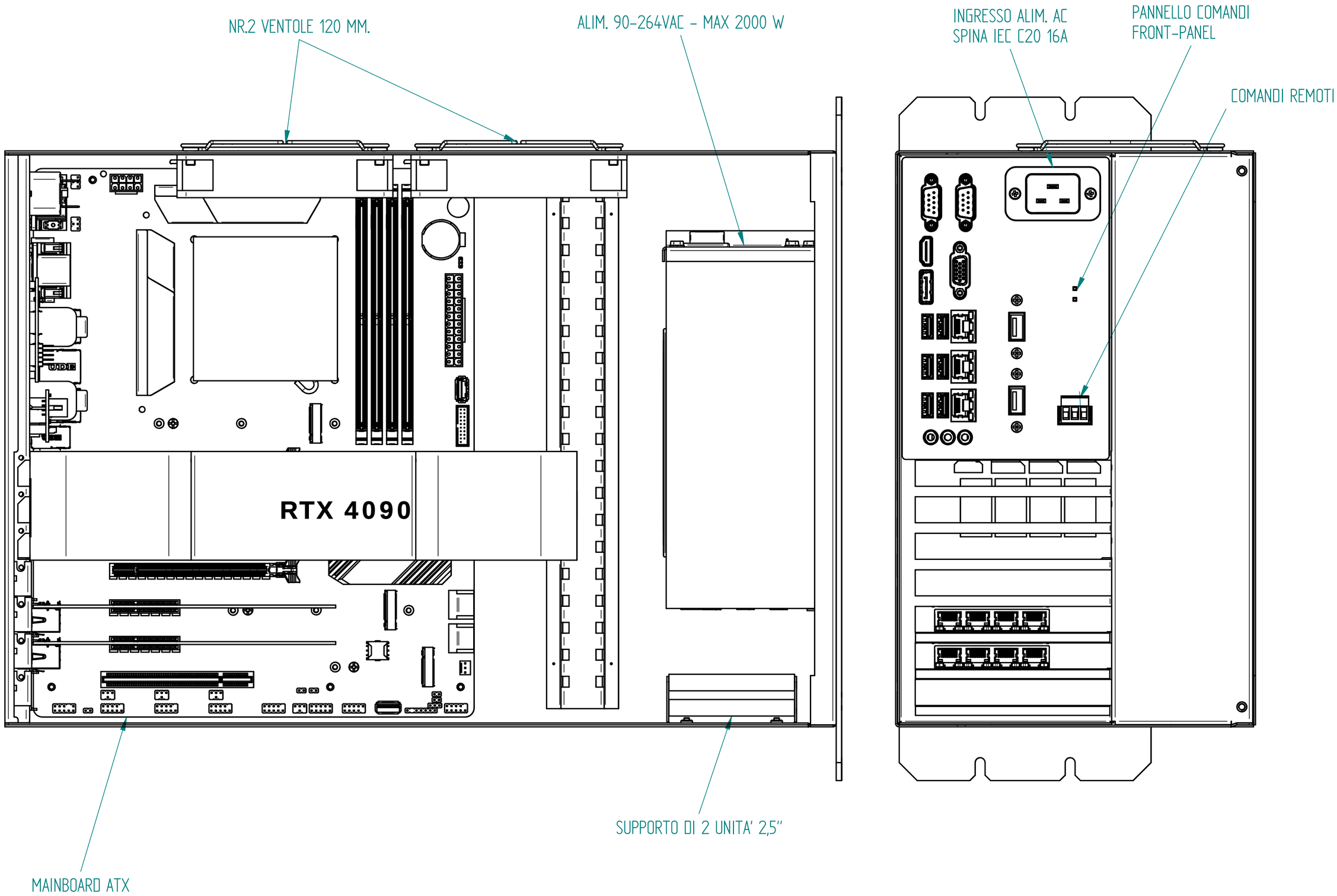

ELMAK
INDUSTRIAL AUTOMATION TECHNOLOGY

Elmak srl
Via Luigi Barchi 1/A - 42124 - Reggio Emilia - Italy

VIEW TYPE	CARATTERISTICHE
MACHINE NAME	WMT 136

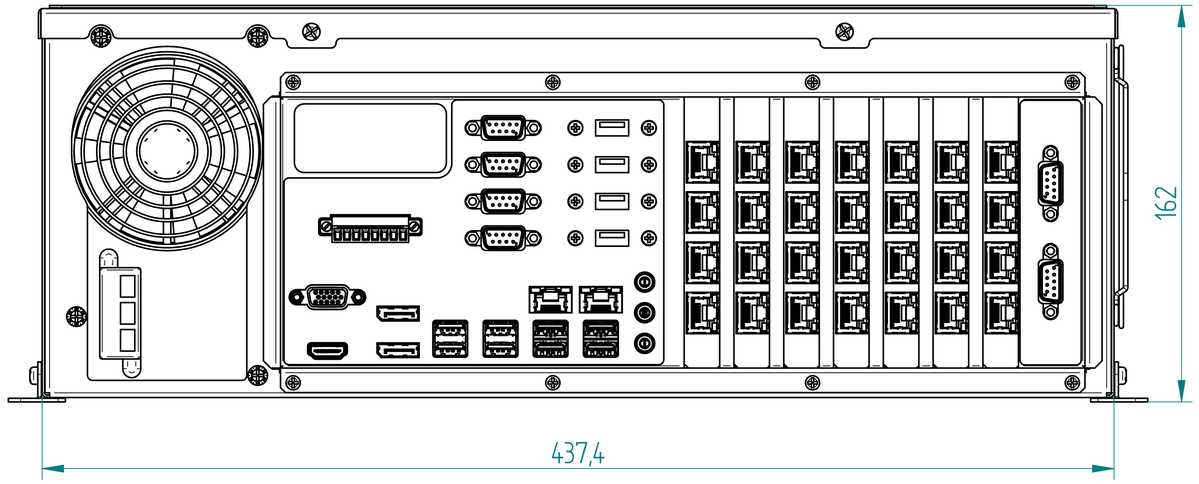

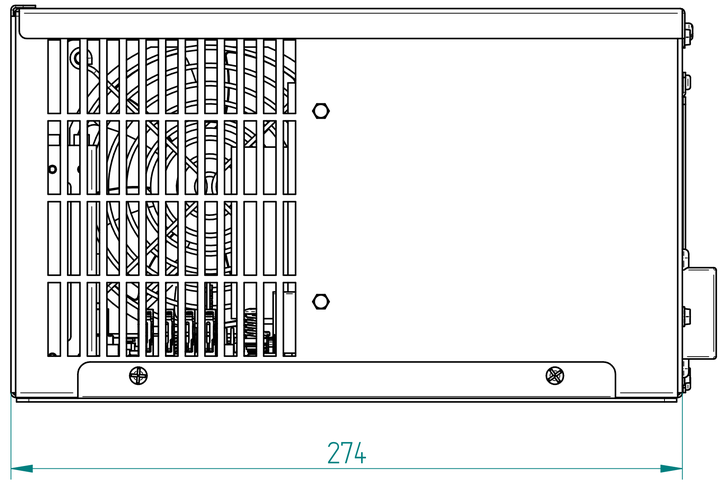

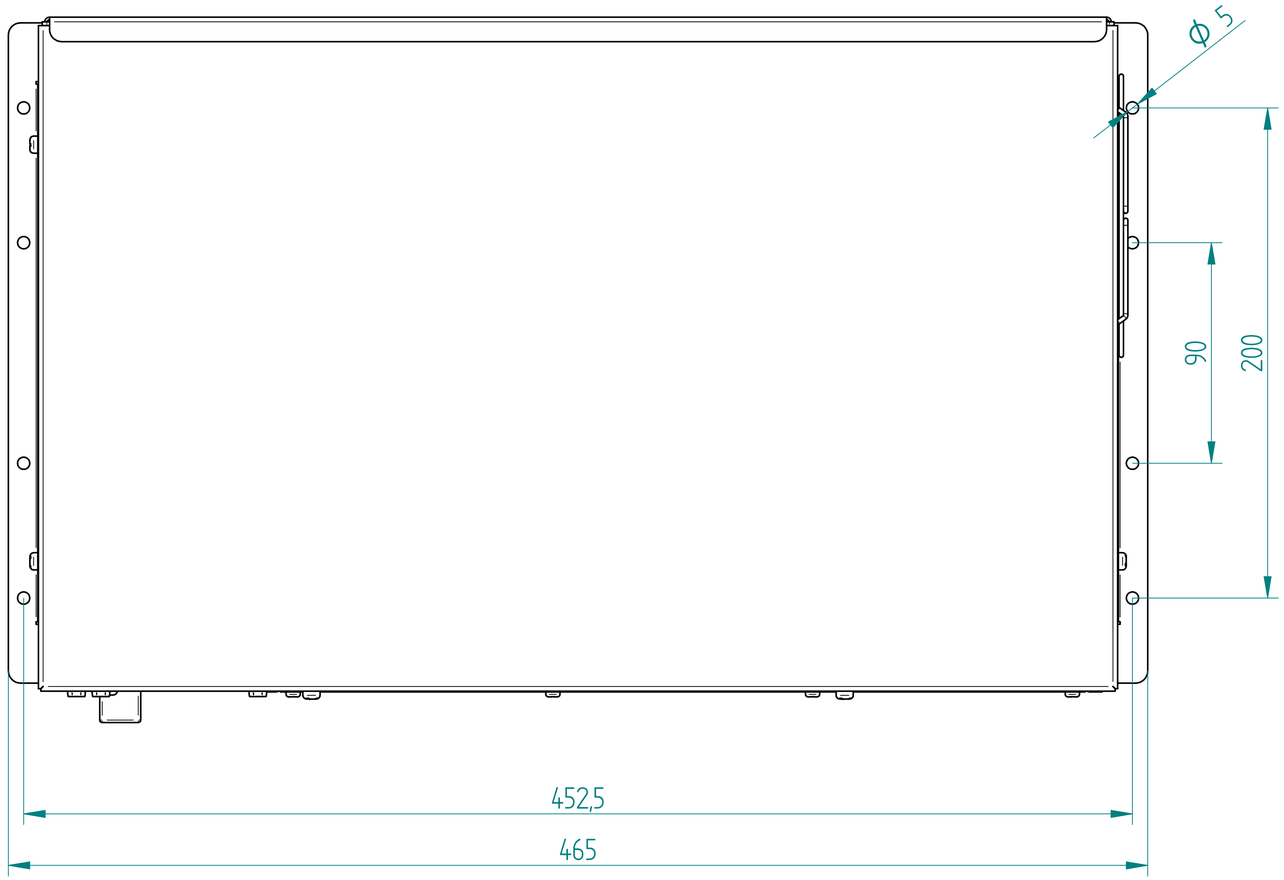

Elmak srl
Via Luigi Borchi 1/A - 42124 - Reggio Emilia - Italy

VIEW TYPE	STANDARD
MACHINE NAME	WMT 142

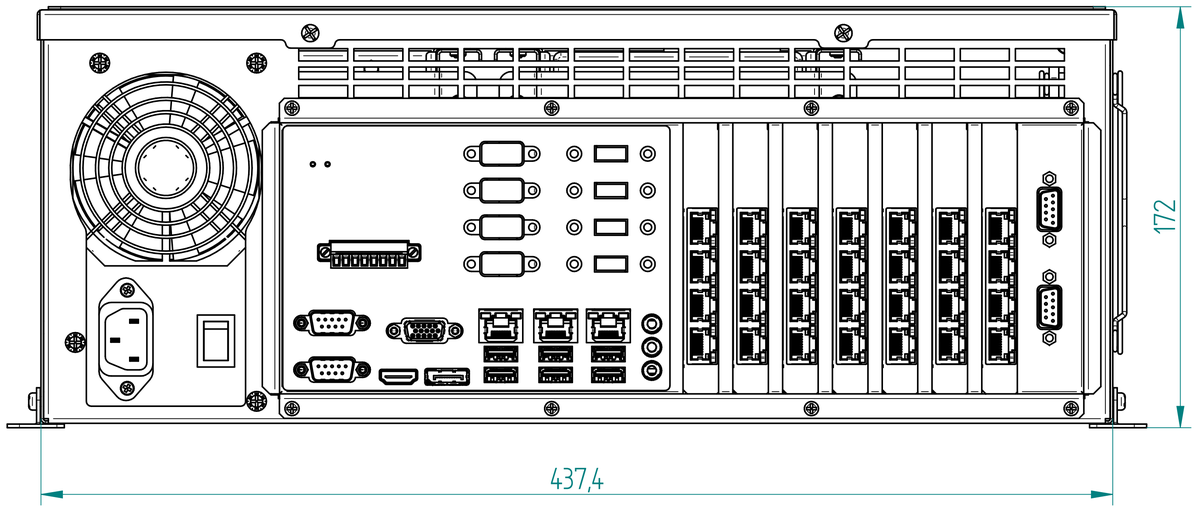

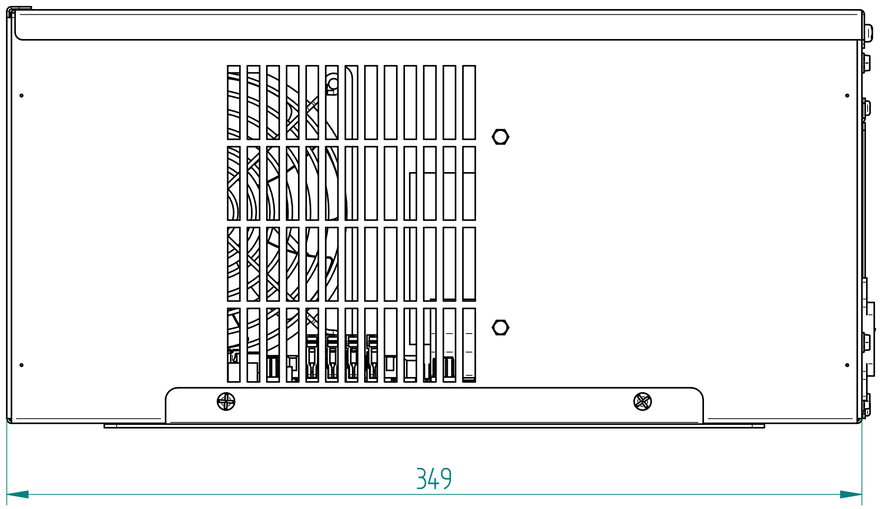

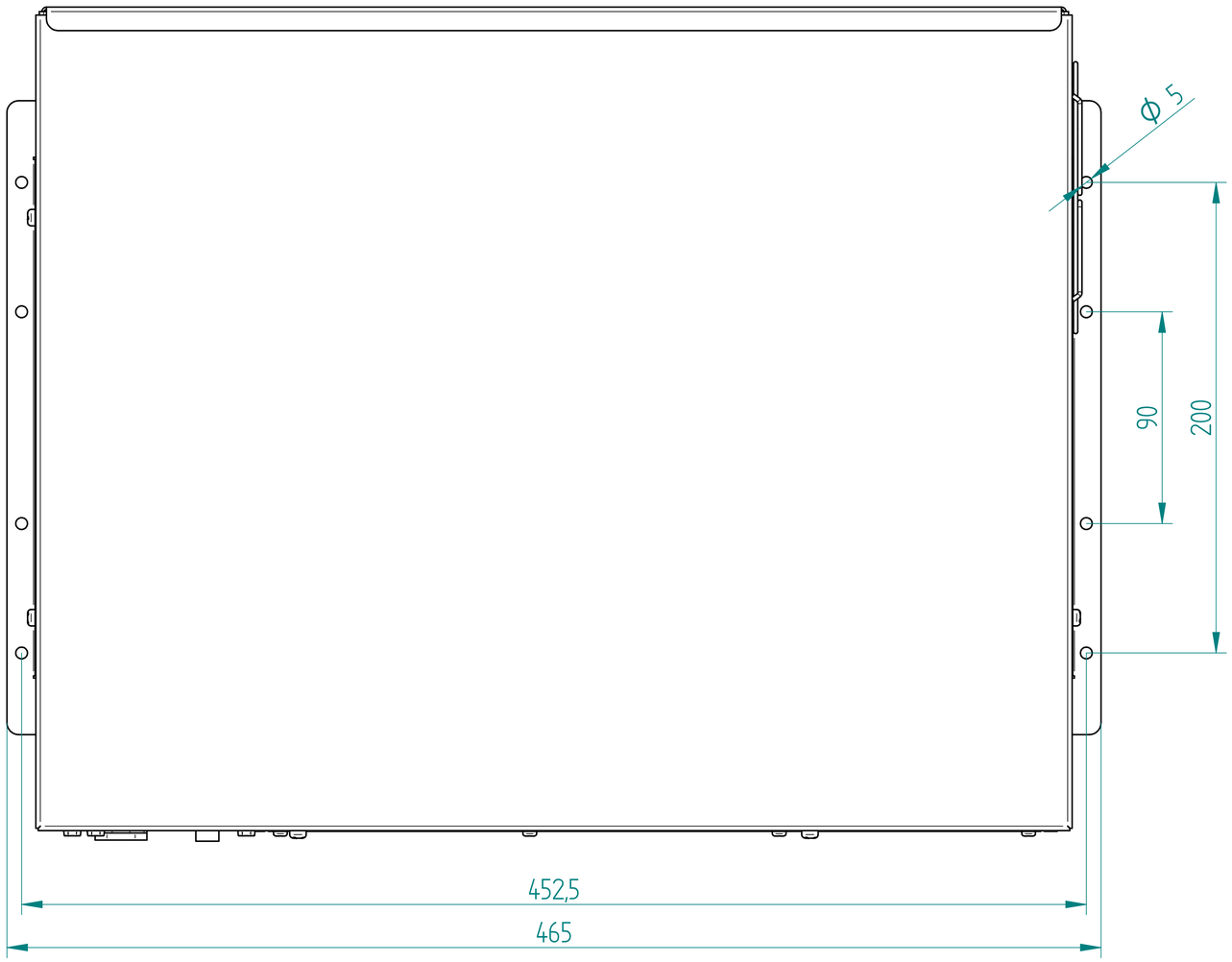

ELMAK
INDUSTRIAL AUTOMATION TECHNOLOGY

Elmak srl
Via Luigi Barchi 1/A - 42124 - Reggio Emilia - Italy

VIEW TYPE STANDARD

MACHINE NAME WMT 143