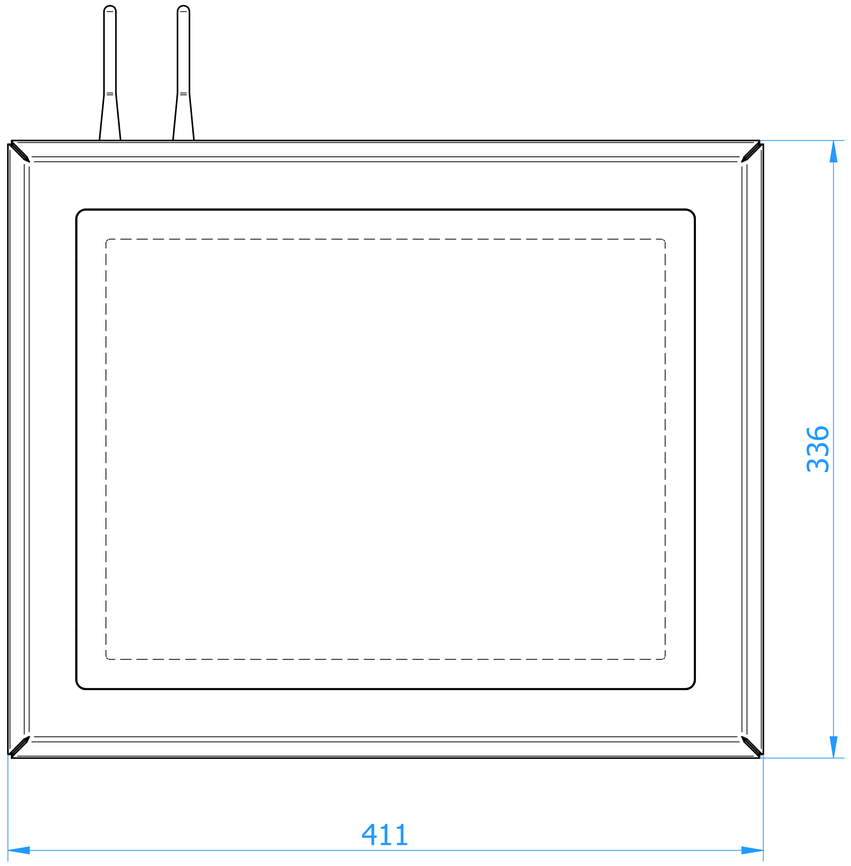

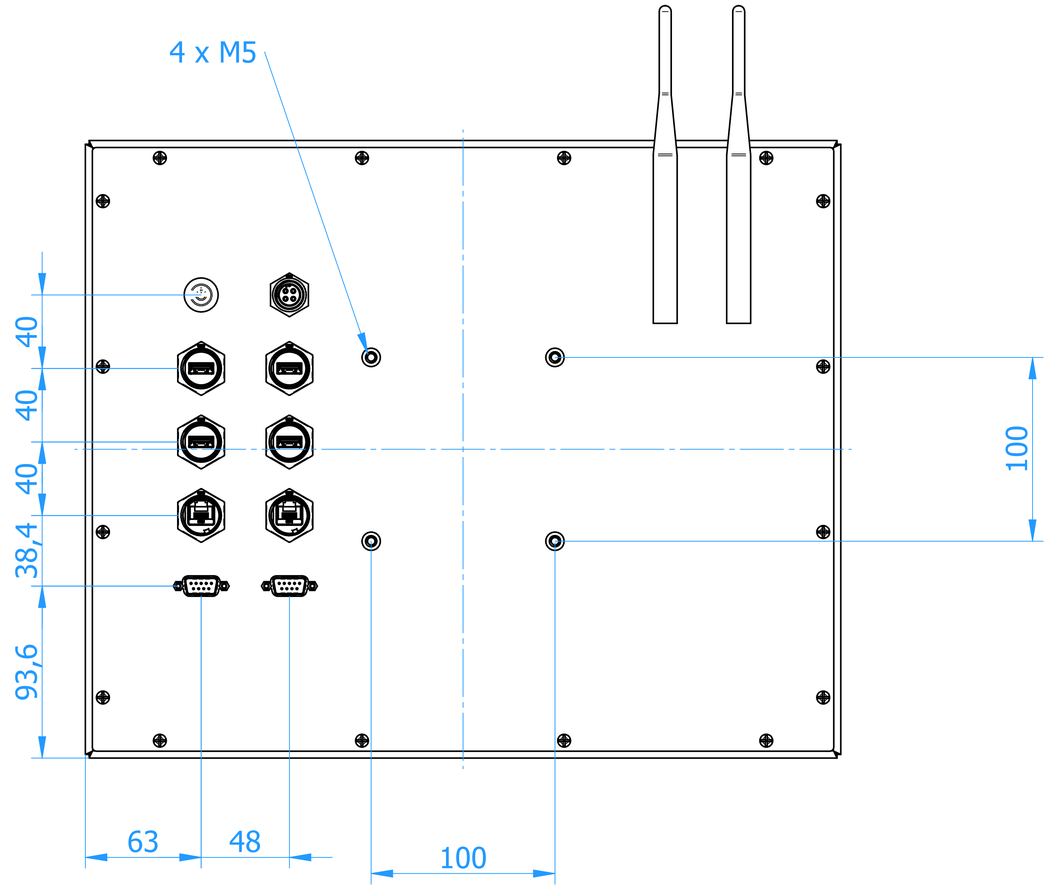

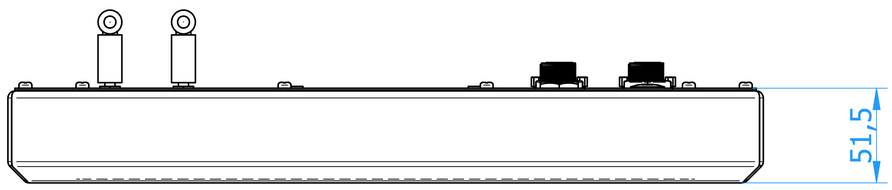

ELMAK INDUSTRIAL AUTOMATION TECHNOLOGY

Elmak srl
Via Luigi Barchi 1/A - 42124 - Reggio Emilia - Italy

VIEW TYPE	STANDARD
MACHINE NAME	CPE 4150

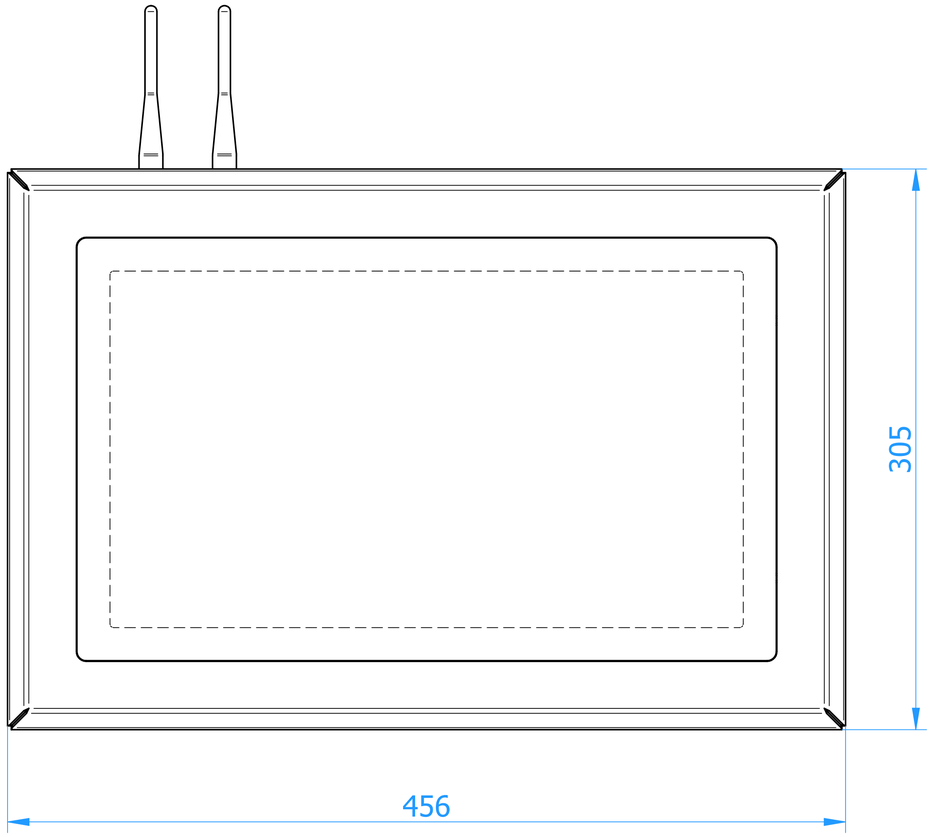

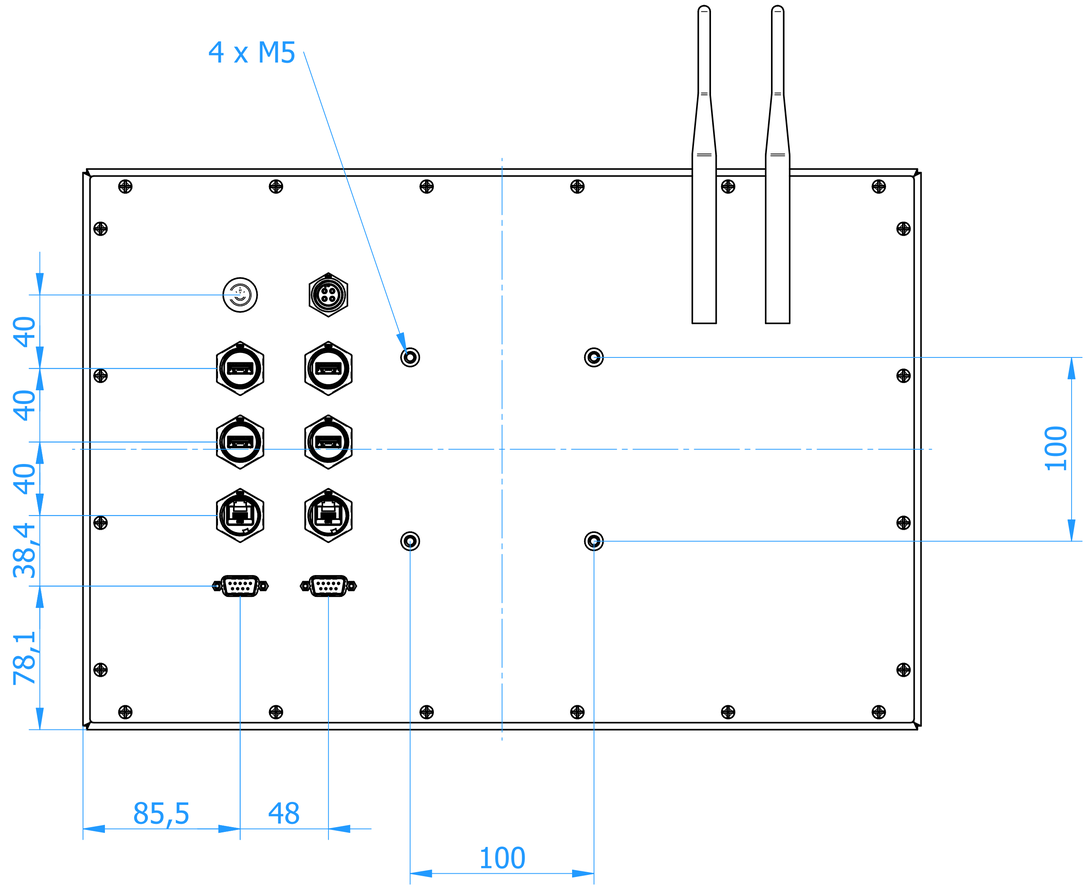

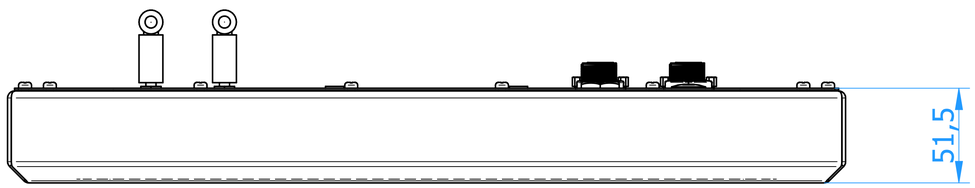

ELMAK INDUSTRIAL AUTOMATION TECHNOLOGY

Elmak srl
Via Luigi Barchi 1/A - 42124 - Reggio Emilia - Italy

VIEW TYPE	STANDARD
MACHINE NAME	CPE 4156

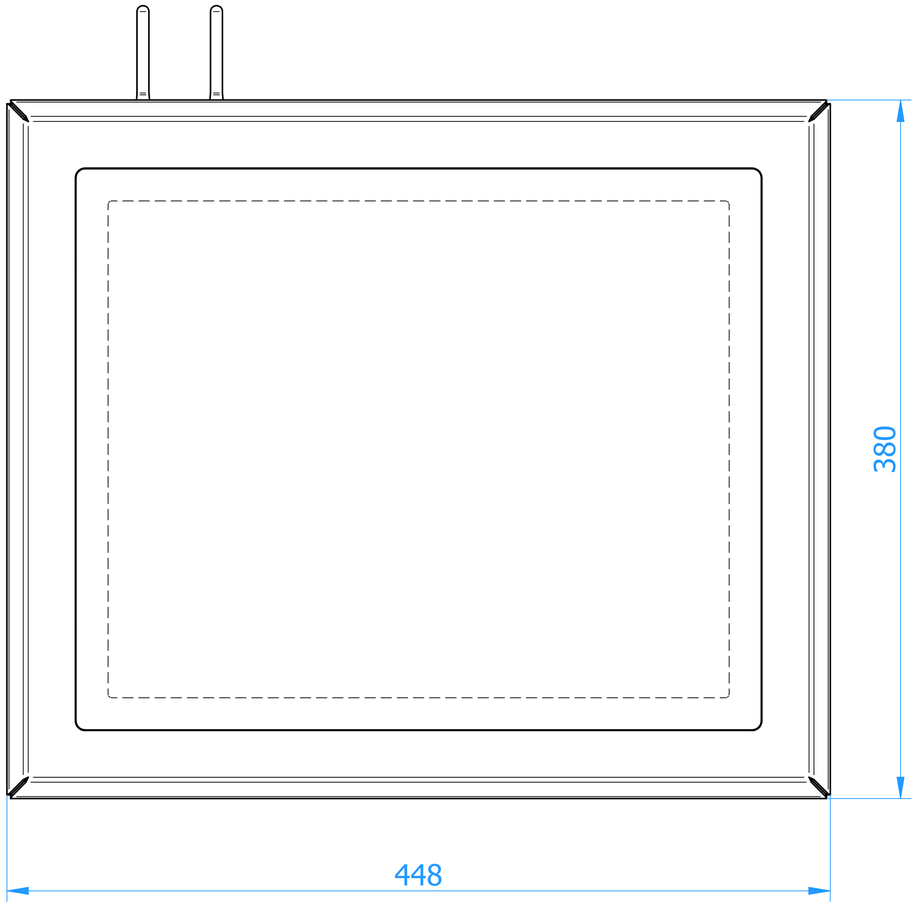

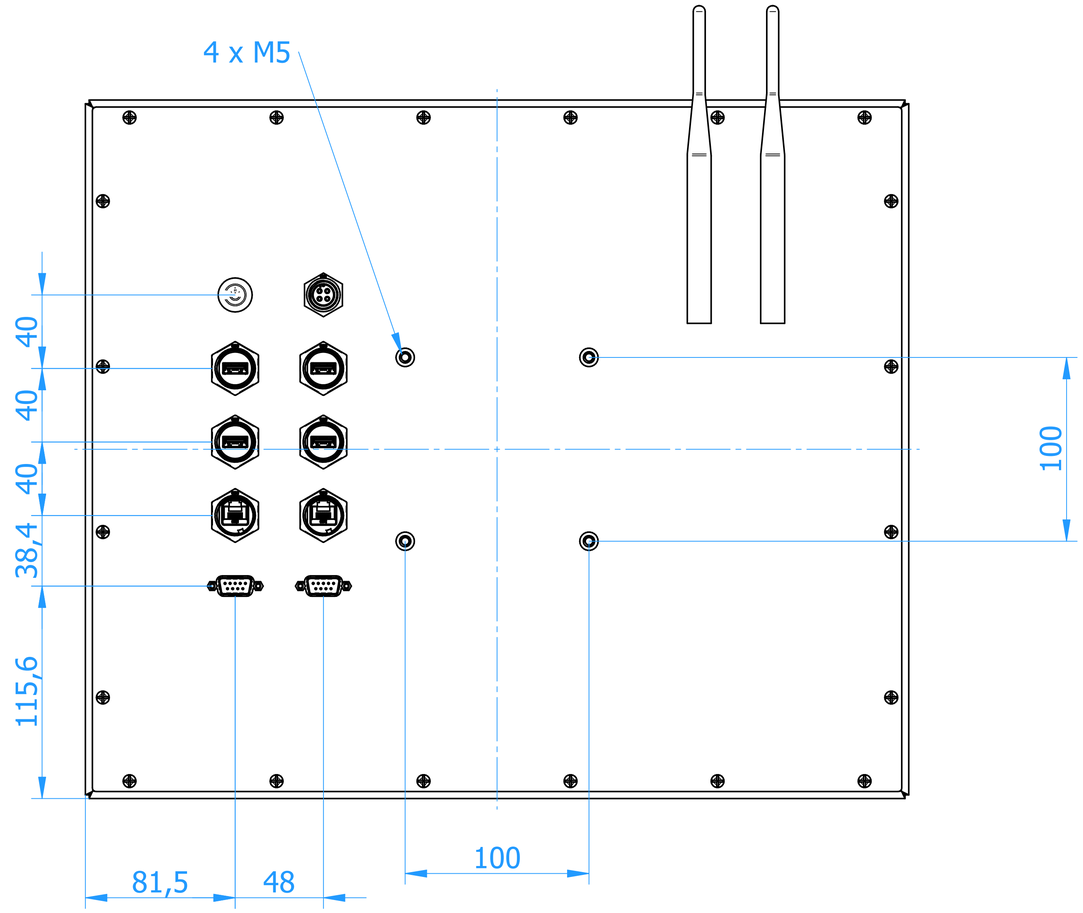

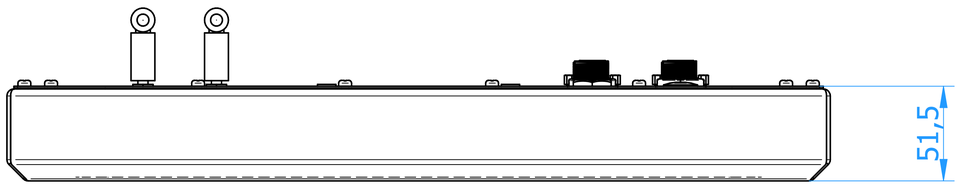

ELMAK INDUSTRIAL AUTOMATION TECHNOLOGY

Elmak srl
Via Luigi Barchi 1/A - 42124 - Reggio Emilia - Italy

VIEW TYPE	STANDARD
MACHINE NAME	CPE 4170

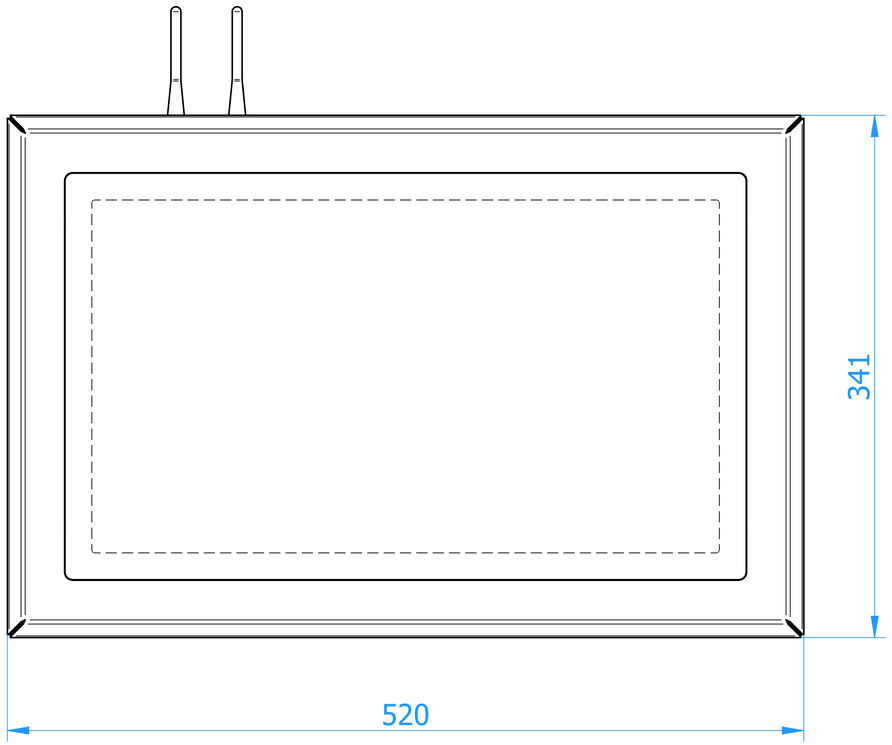

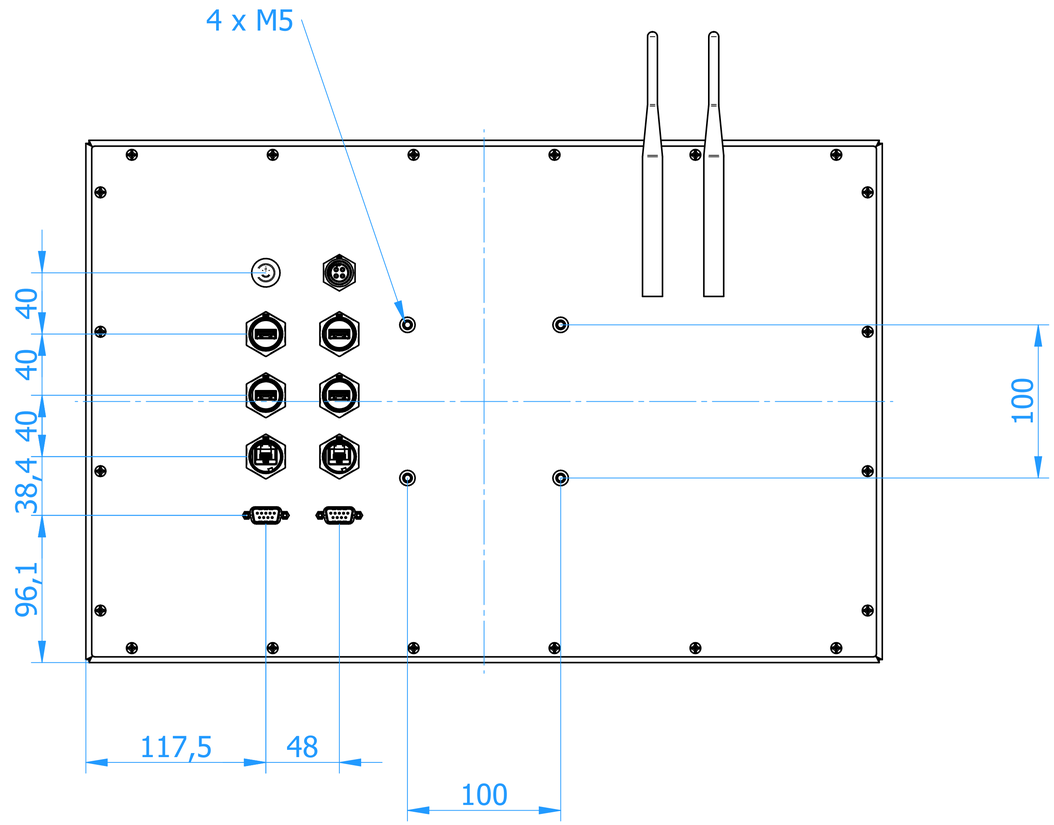

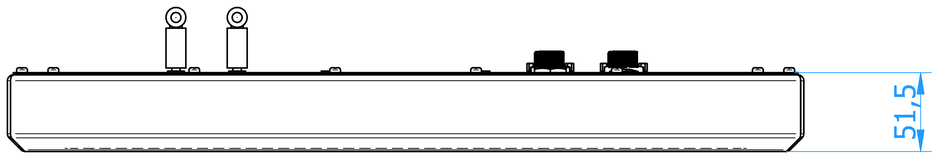

ELMAK
INDUSTRIAL AUTOMATION TECHNOLOGY

Elmak srl
Via Luigi Borchi 1/A - 42124 - Reggio Emilia - Italy

VIEW TYPE **STANDARD**

MACHINE NAME **CPE 4185**

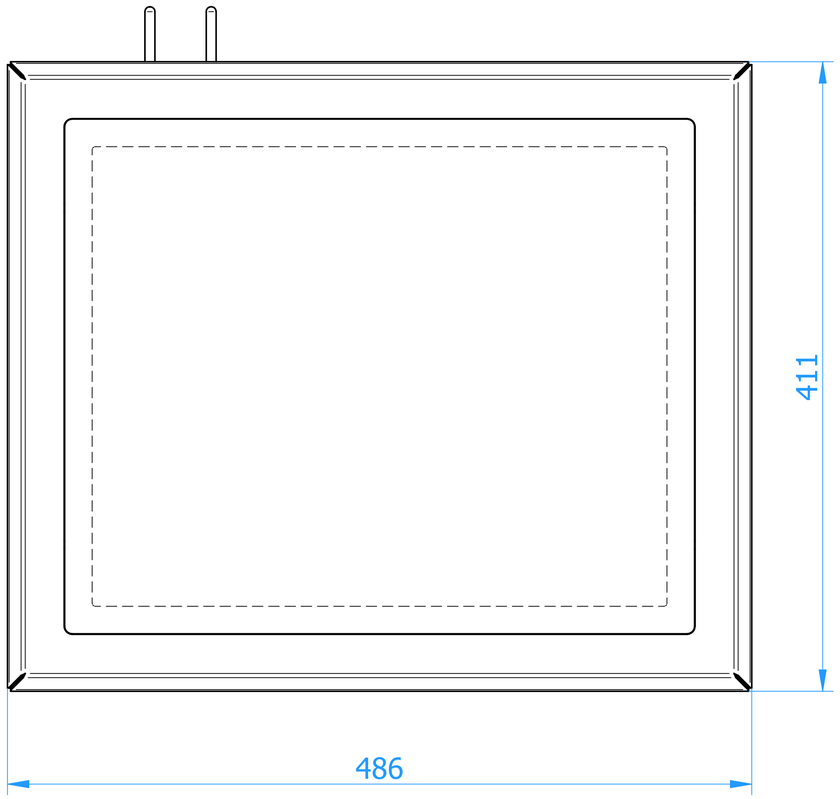

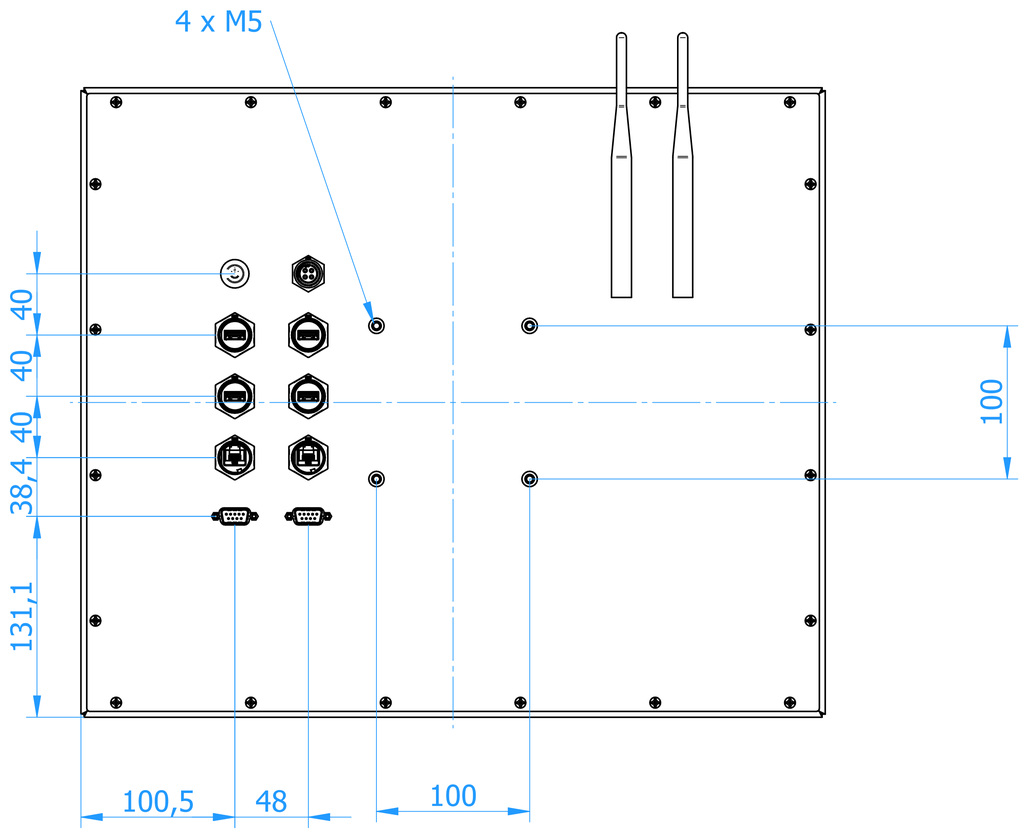

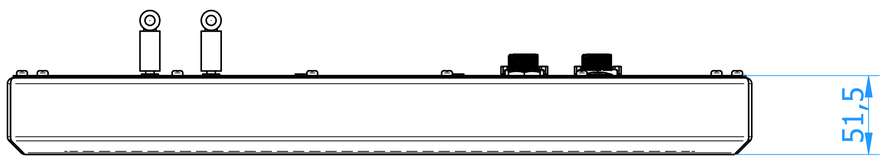

ELMAK INDUSTRIAL AUTOMATION TECHNOLOGY

Elmak srl
Via Luigi Borchi 1/A – 42124 – Reggio Emilia – Italy

VIEW TYPE **STANDARD**

MACHINE NAME **CPE 4190**

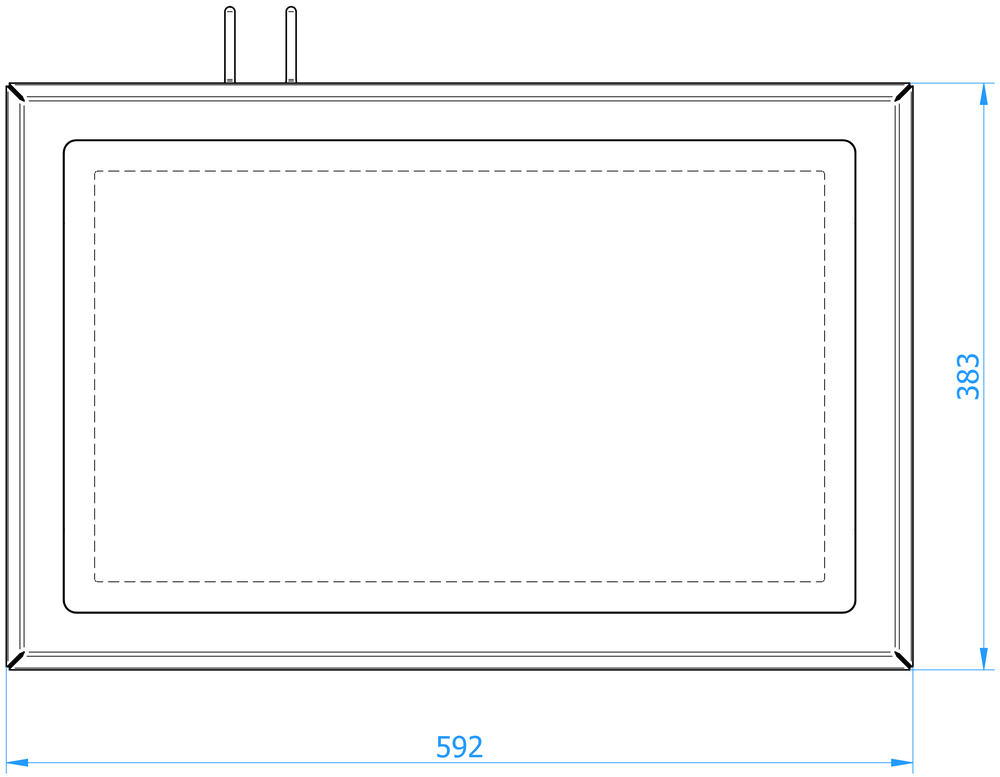

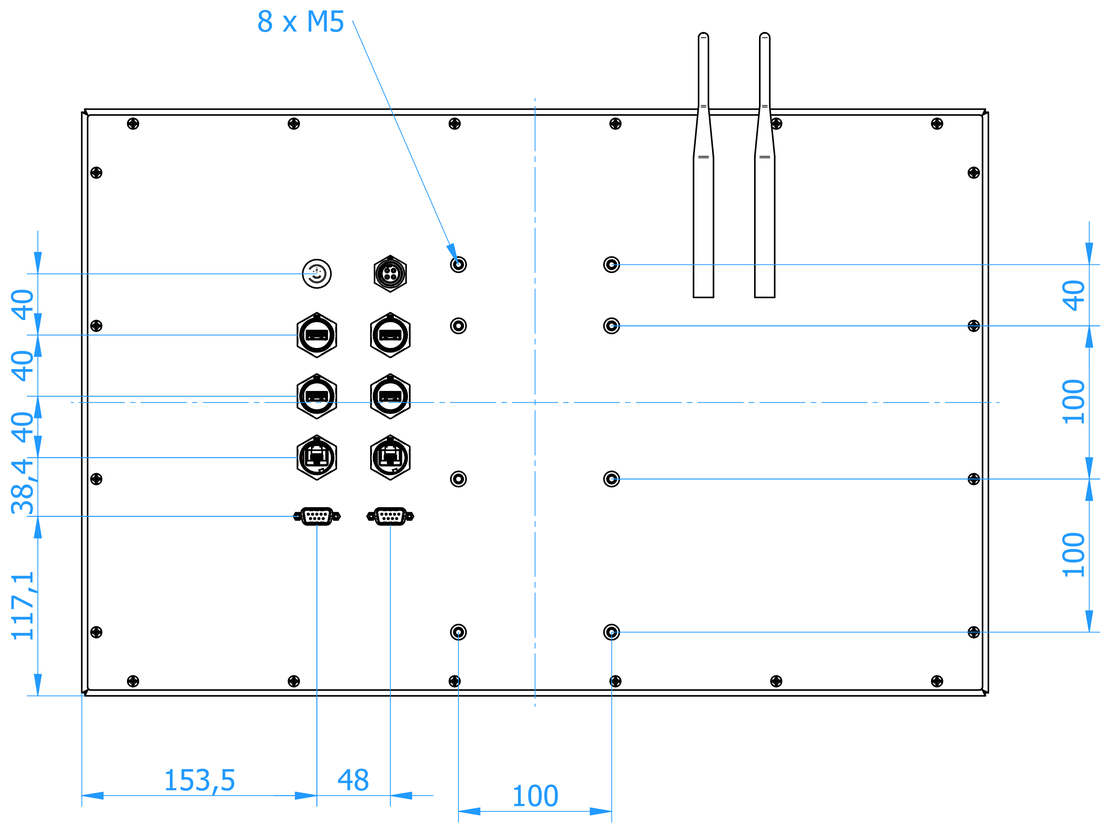

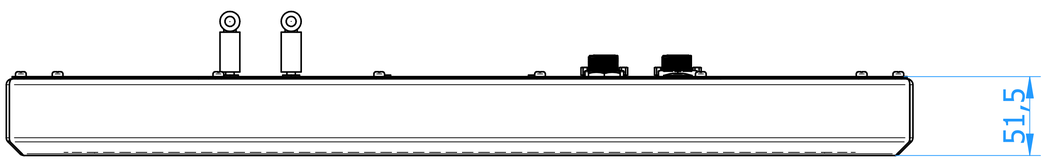

Elmak srl
Via Luigi Barchi 1/A - 42124 - Reggio Emilia - Italy

VIEW TYPE	STANDARD
MACHINE NAME	CPE 4215

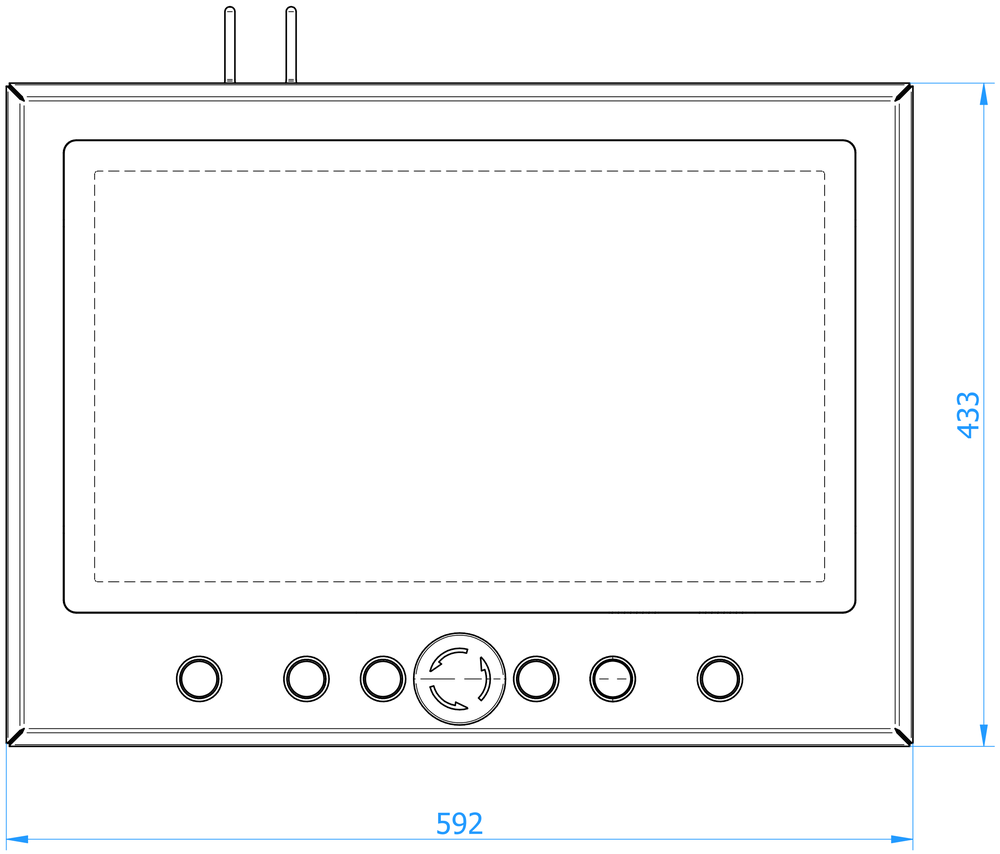

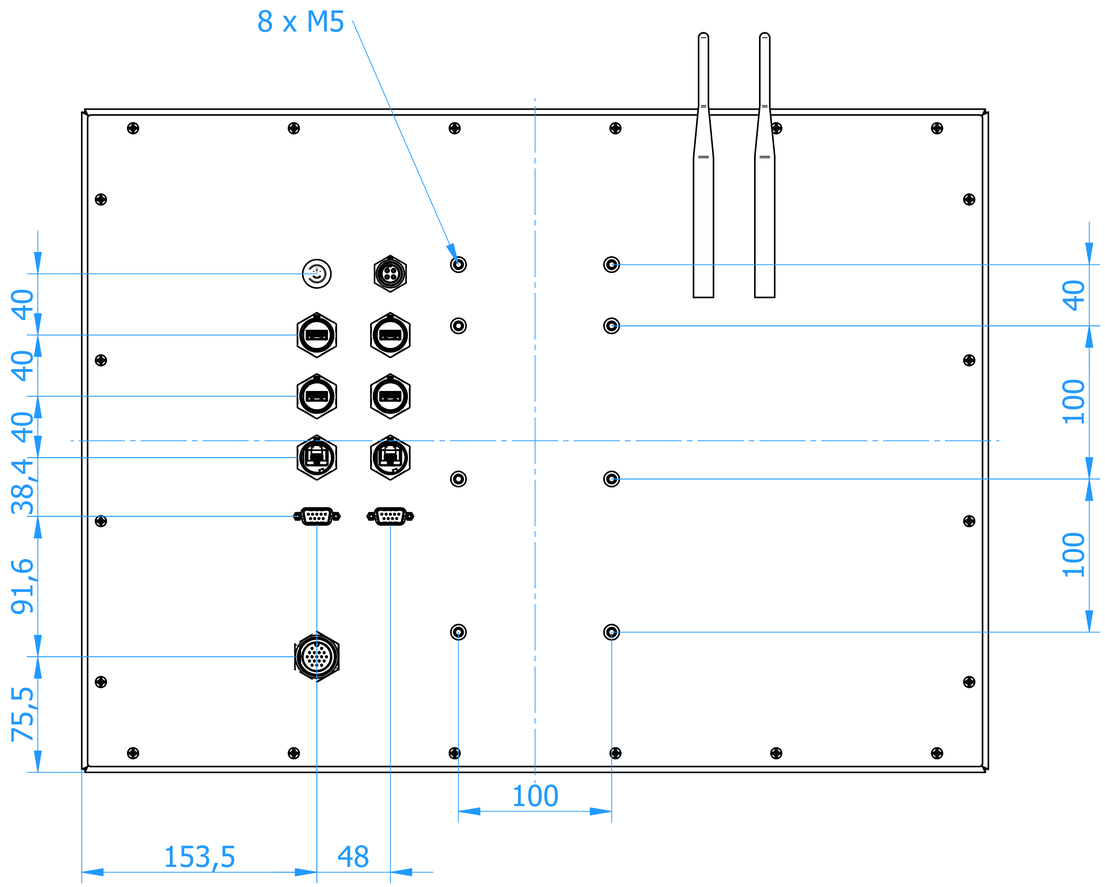

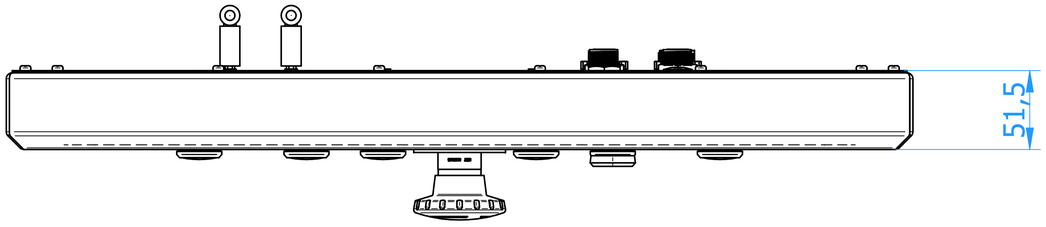

VIEW TYPE	STANDARD
MACHINE NAME	CPE 4215 P

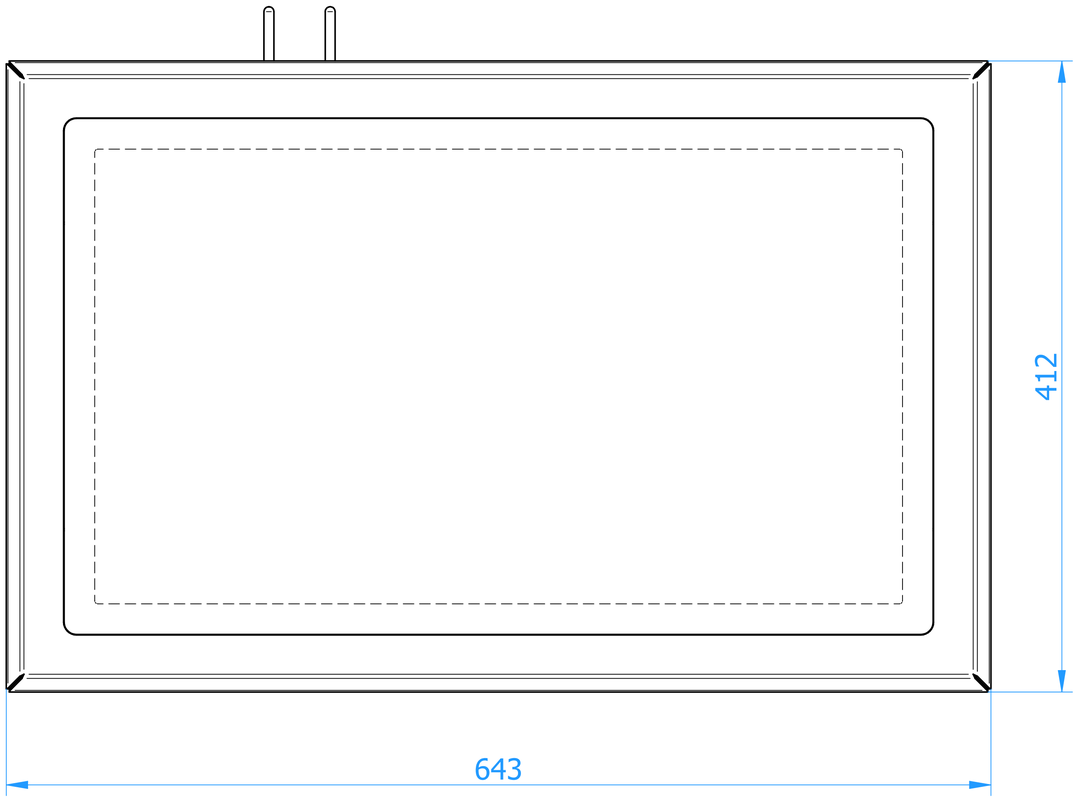

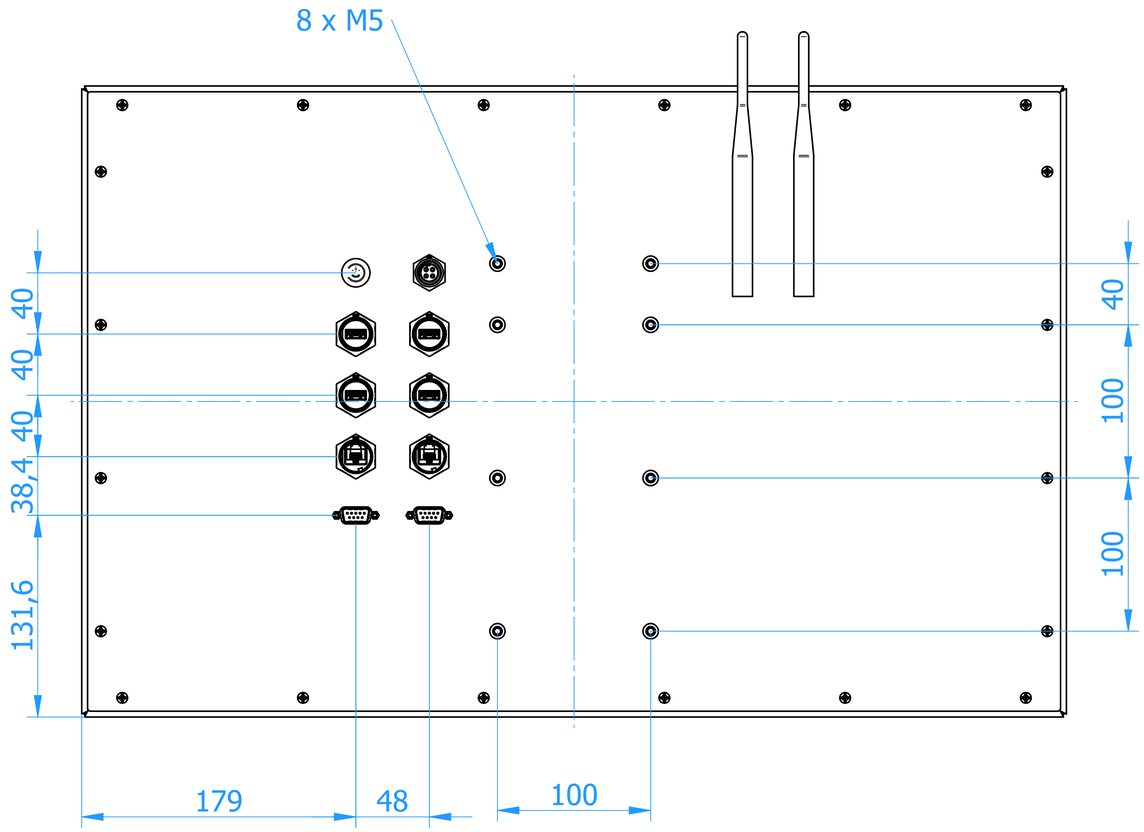

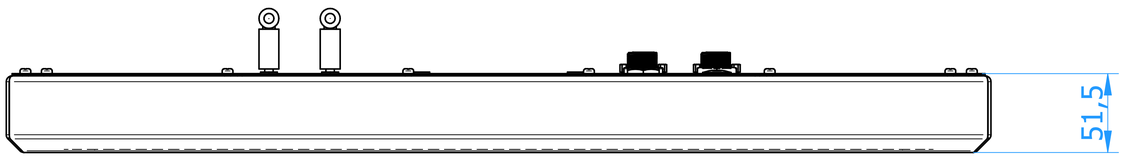

Elmak srl
Via Santi Grisante e Daria, 70
42124 - Reggio Emilia - Italy

VIEW TYPE	**STANDARD**
MACHINE NAME	**CPE 4240**

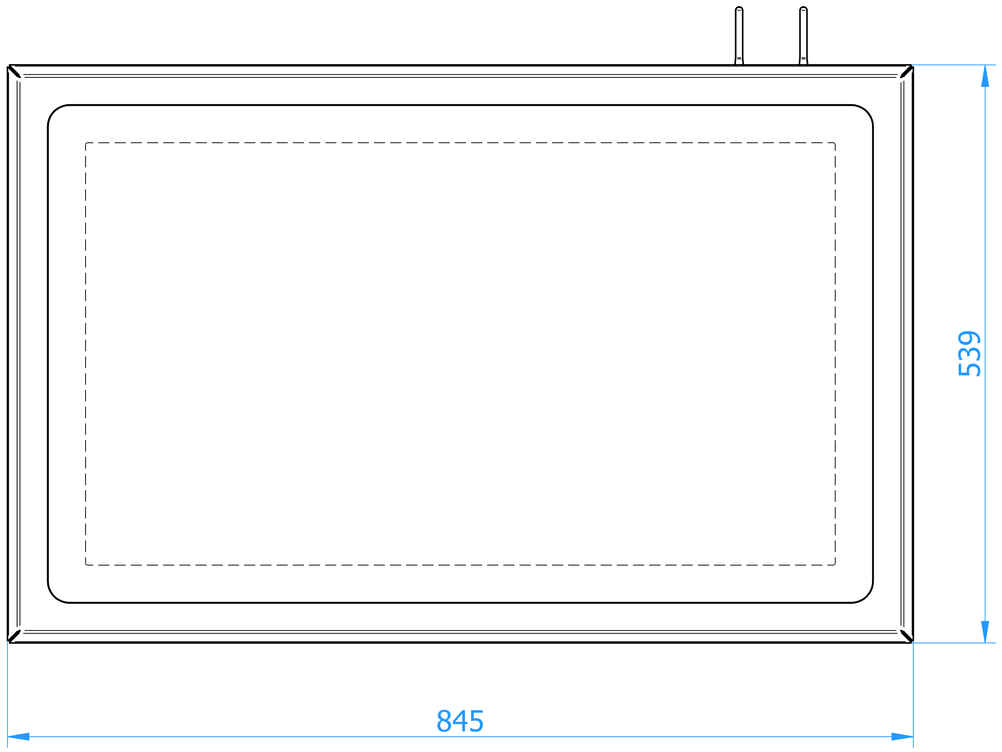

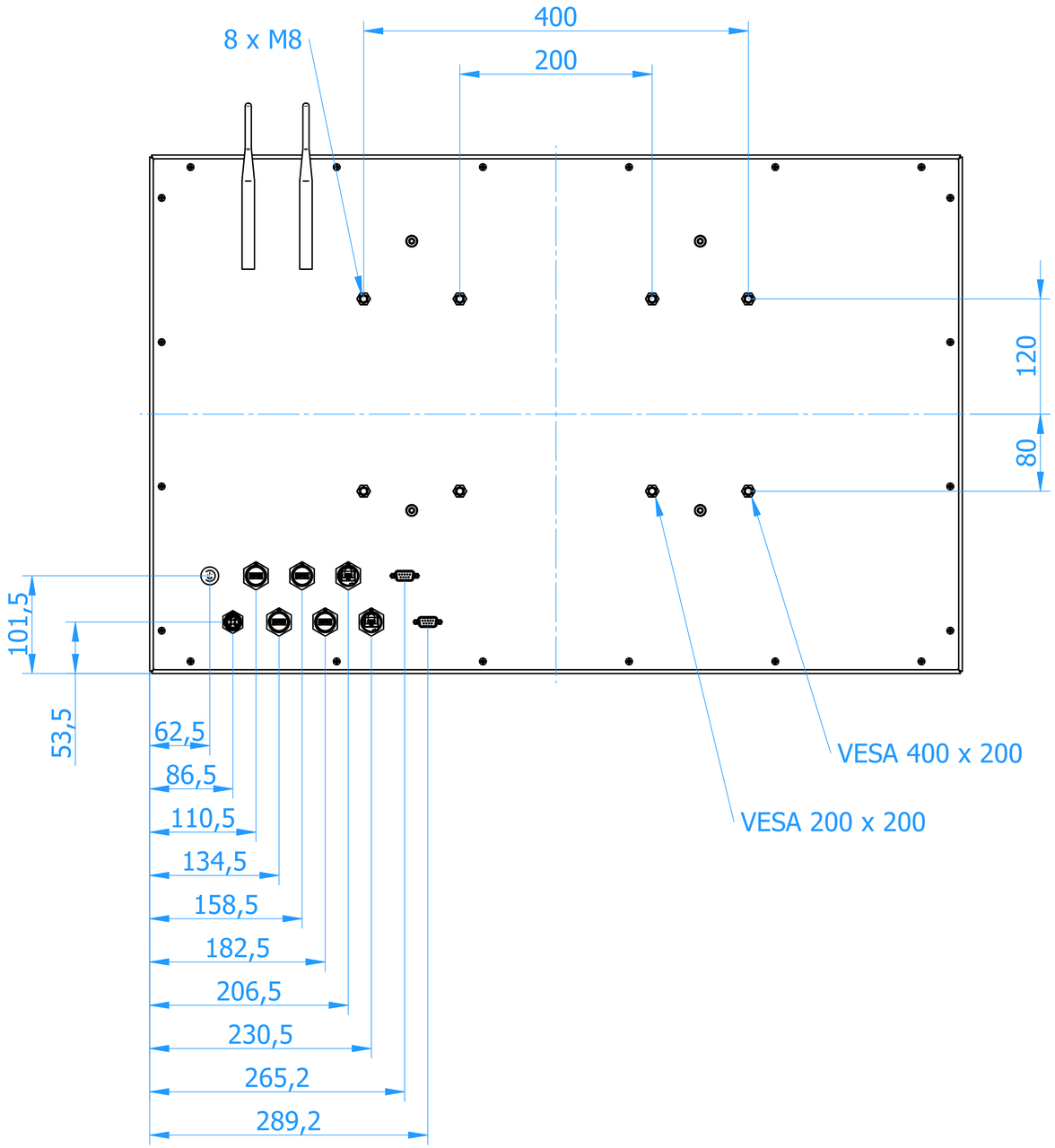

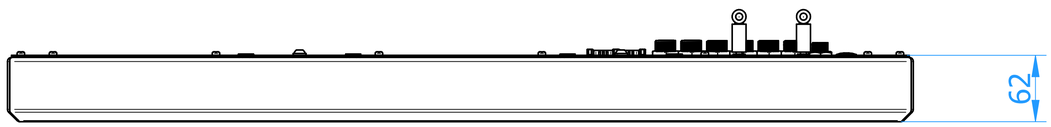

ELMAK
INDUSTRIAL AUTOMATION TECHNOLOGY

Elmak srl
Via Luigi Barchi 1/A - 42124 - Reggio Emilia - Italy

VIEW TYPE **STANDARD**

MACHINE NAME **CPE 4320**