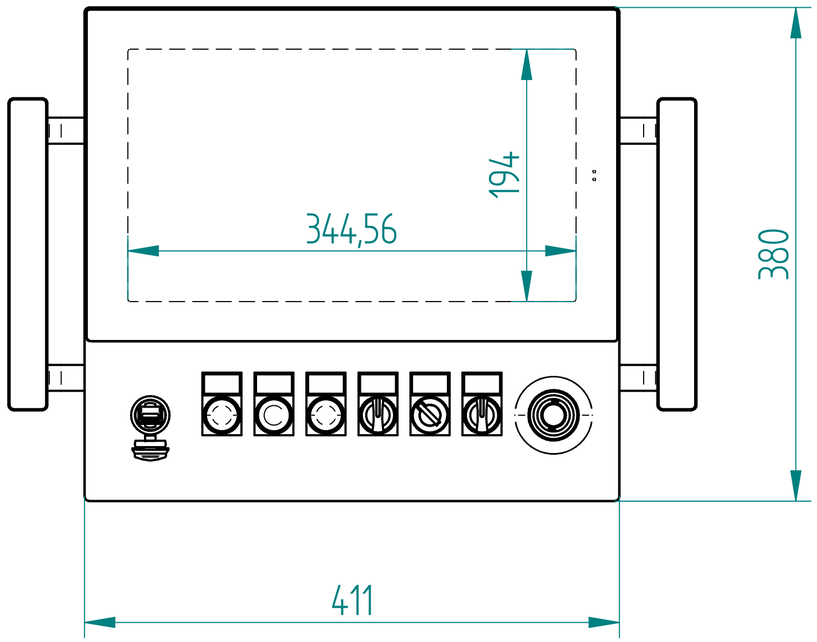

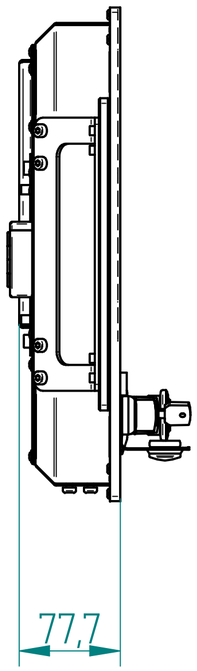

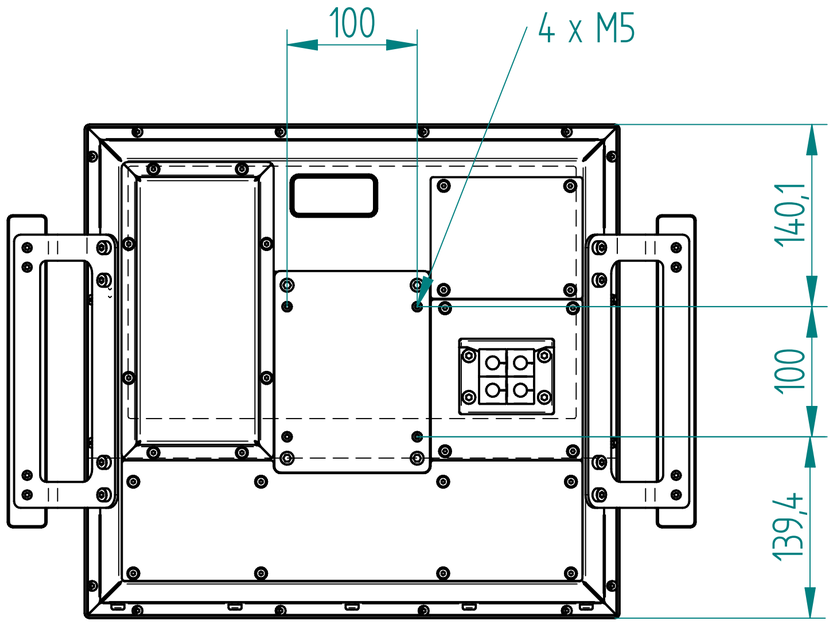

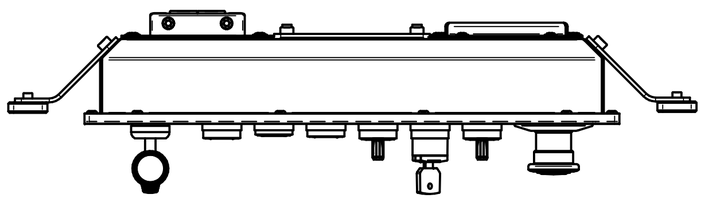

ELMAK INDUSTRIAL AUTOMATION TECHNOLOGY

Elmak srl
Via Luigi Barchi 1/A - 42124 - Reggio Emilia - Italy

VIEW TYPE	Viste standard
MACHINE NAME	PSE 5156

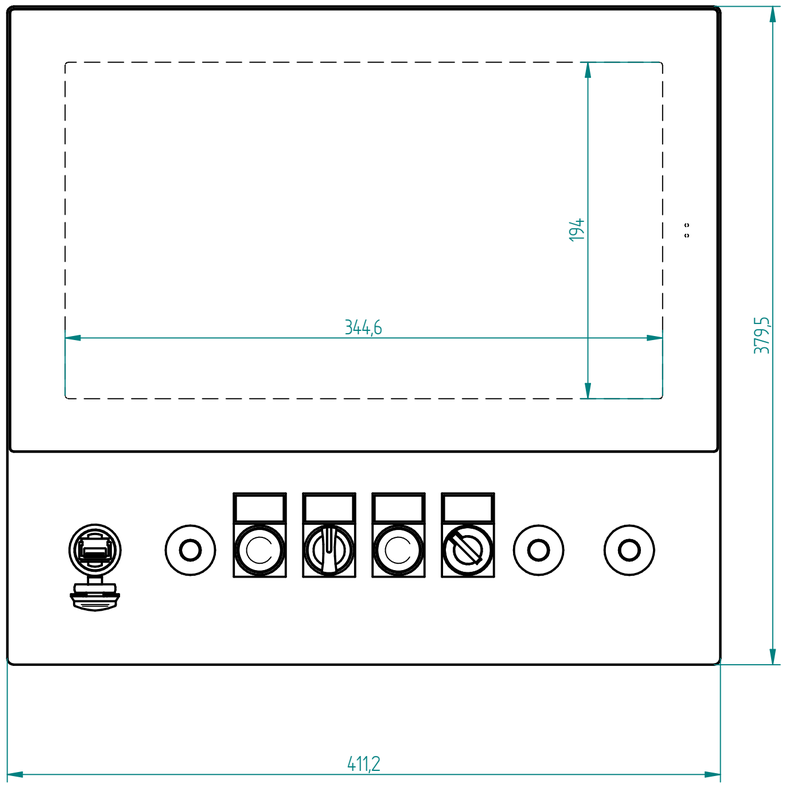

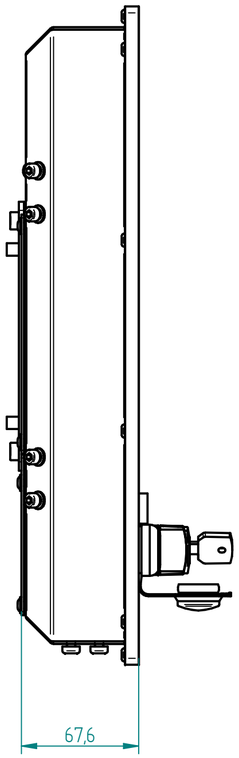

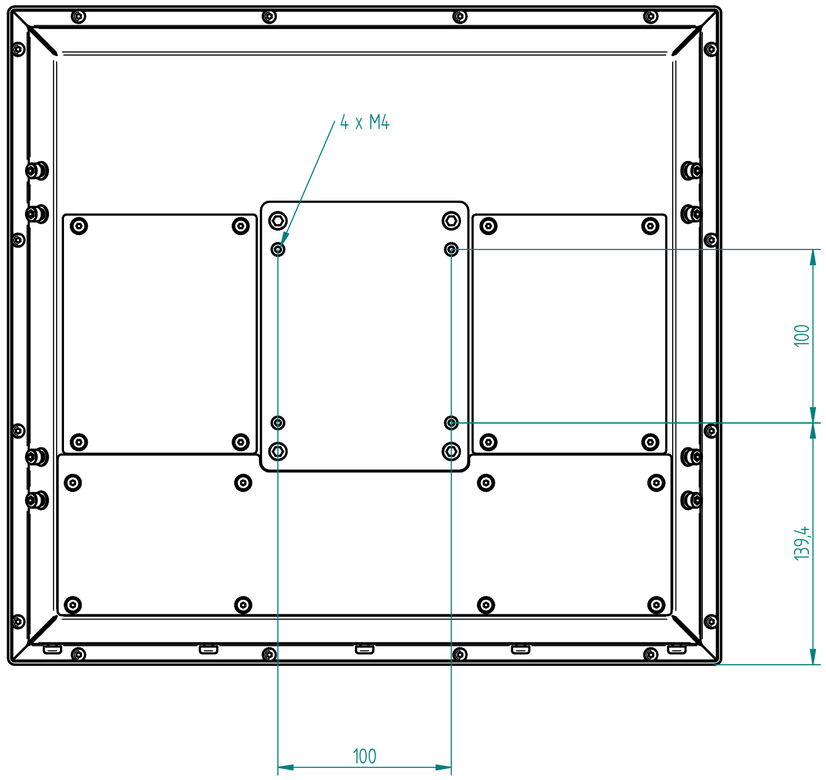

ELMAK
INDUSTRIAL AUTOMATION TECHNOLOGY

Elmak srl
Via Luigi Barchi 1/A - 42124 - Reggio Emilia - Italy

VIEW TYPE	Monitor VESA
MACHINE NAME	PSE 5156

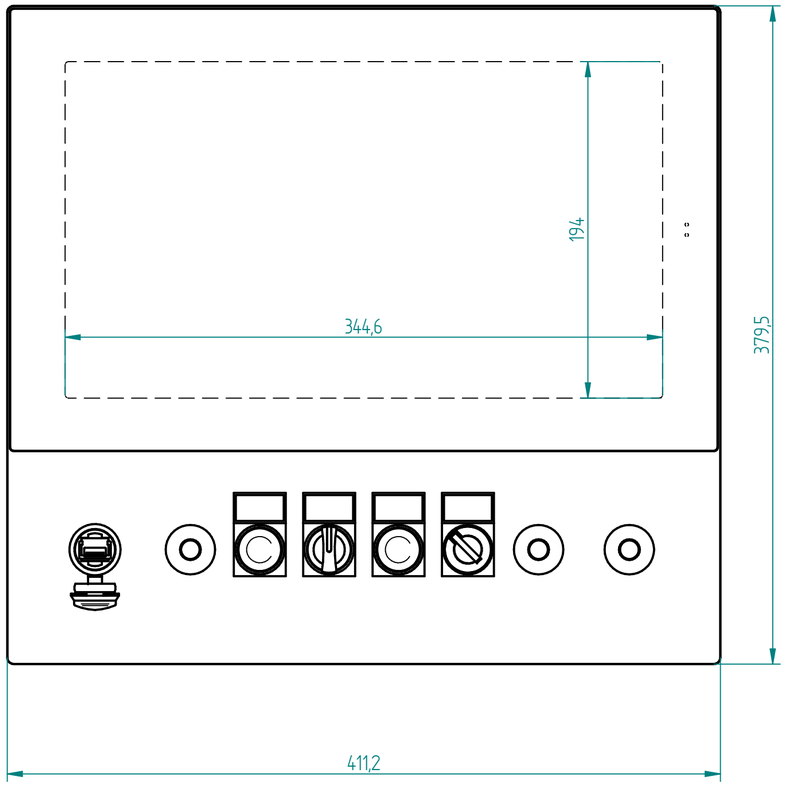

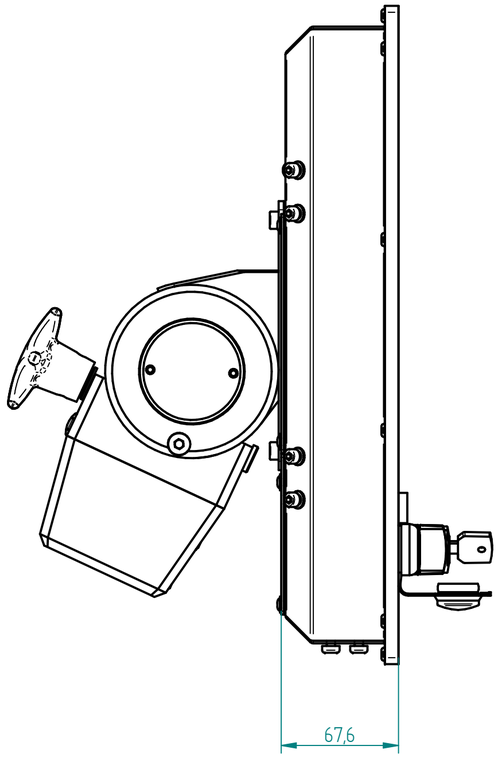

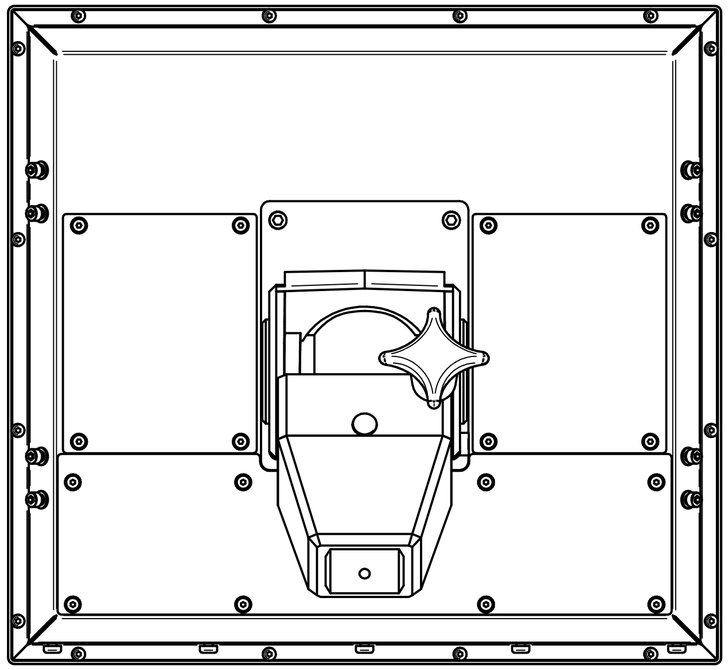

ELMAK INDUSTRIAL AUTOMATION TECHNOLOGY

Elmak srl
Via Luigi Barchi 1/A - 42124 - Reggio Emilia - Italy

VIEW TYPE	Monitor+bernstein
MACHINE NAME	PSE 5156

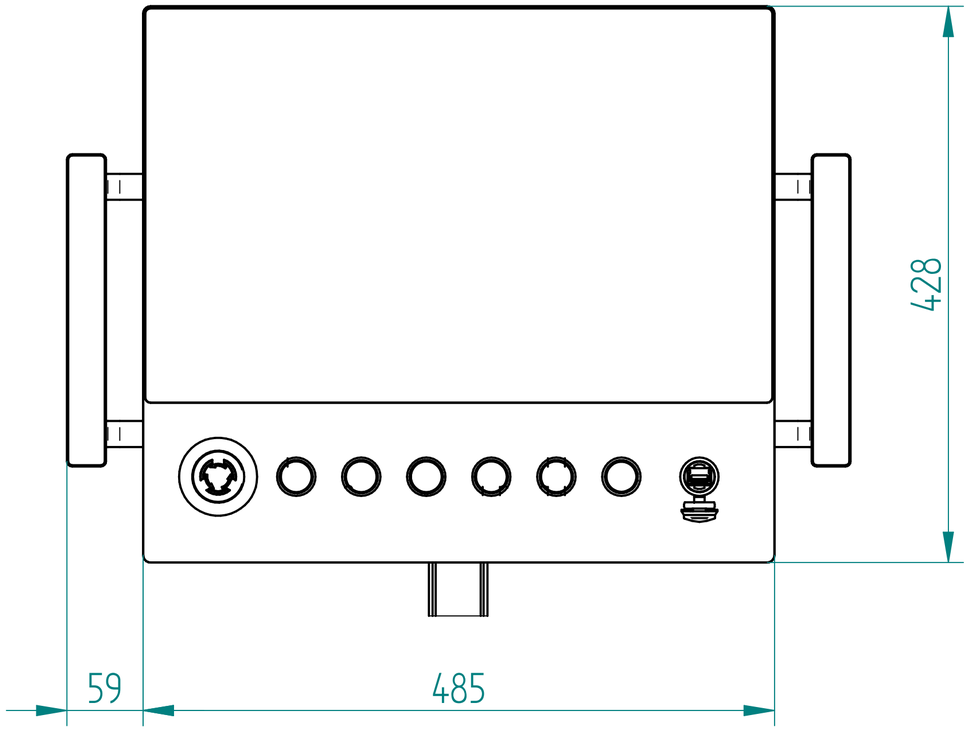

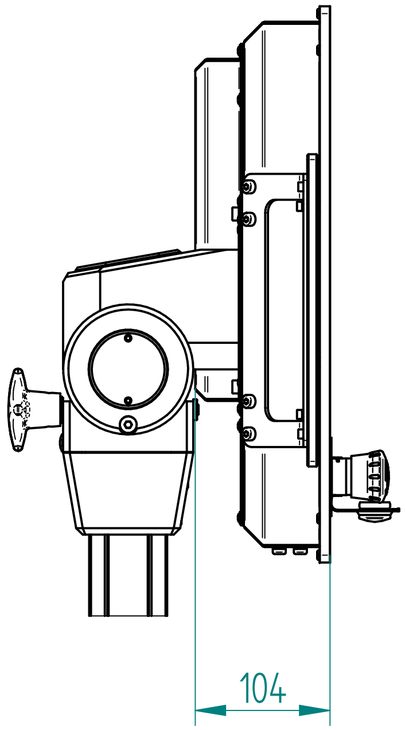

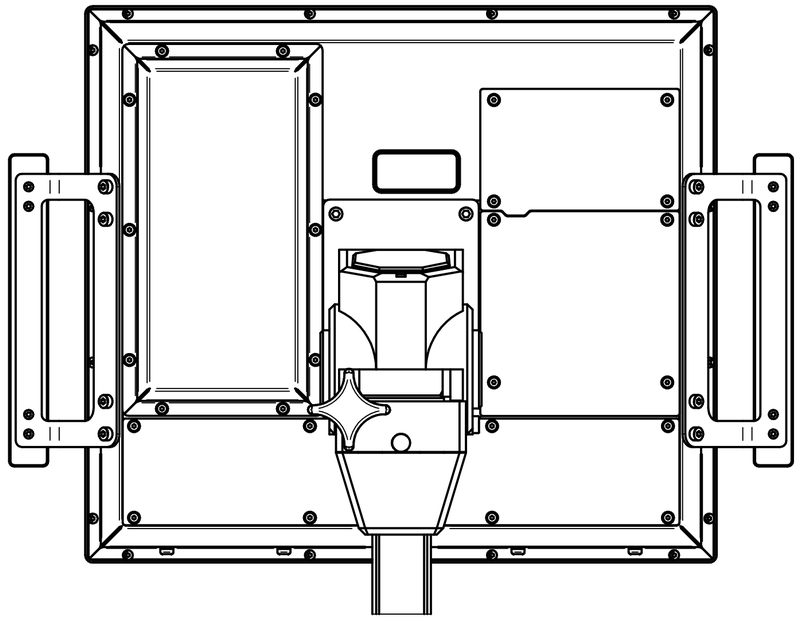

ELMAK INDUSTRIAL AUTOMATION TECHNOLOGY

Elmak srl
Via Luigi Barchi 1/A - 42124 - Reggio Emilia - Italy

VIEW TYPE	Viste standard
MACHINE NAME	PSE 5185

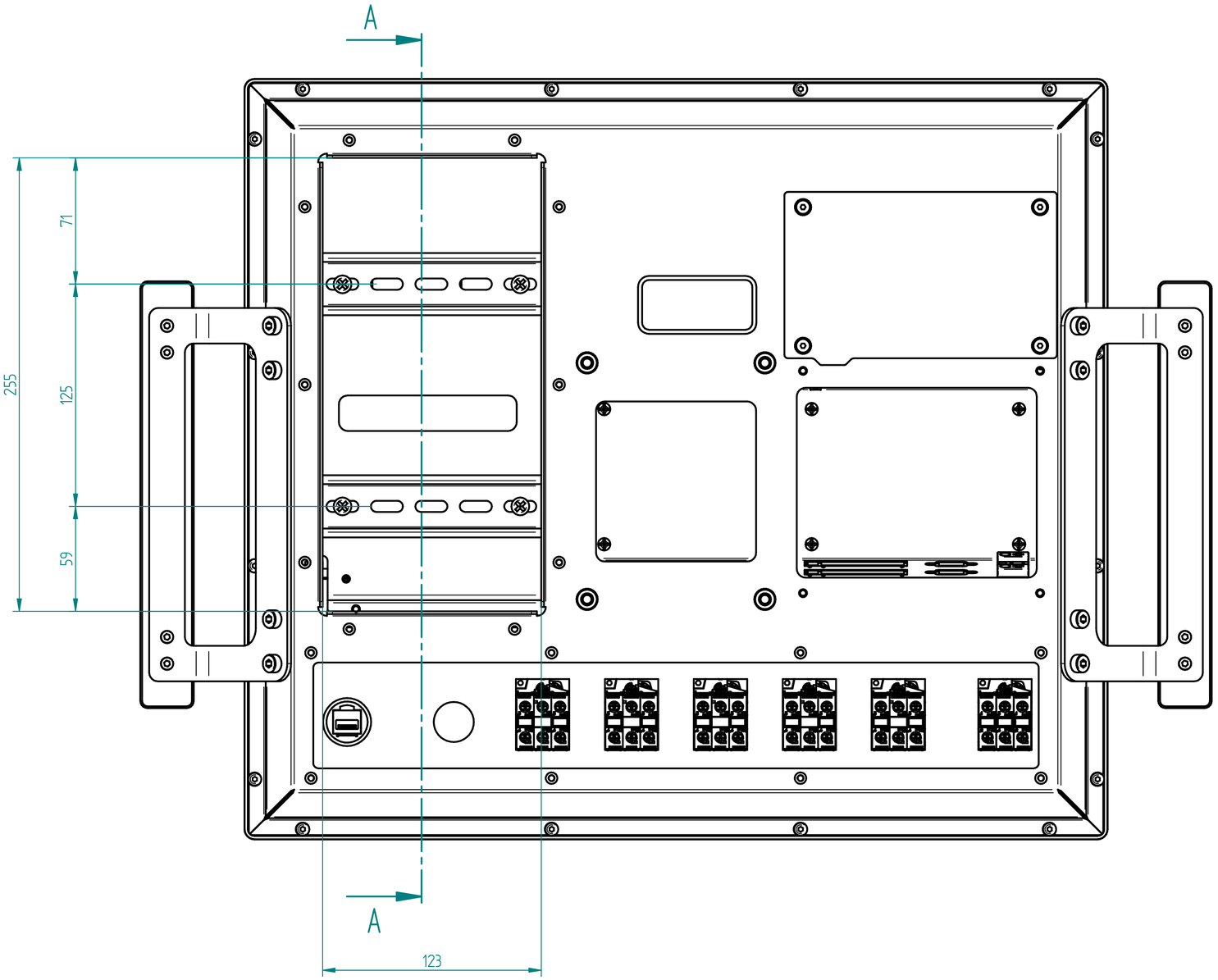

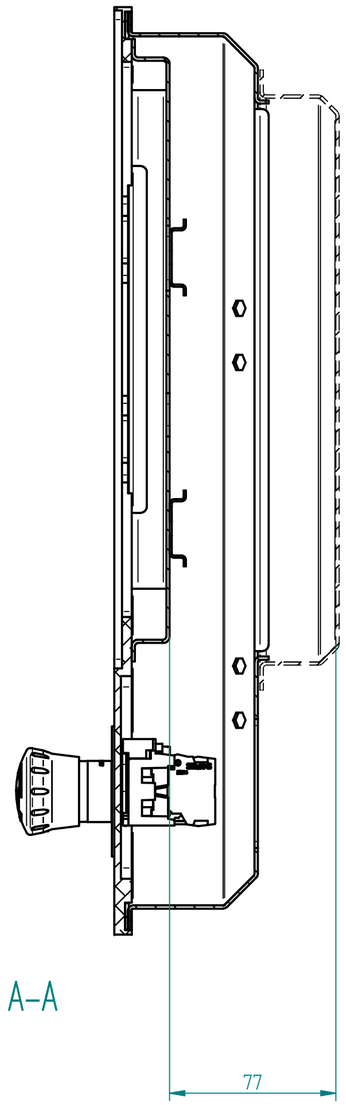

SECTION A-A

ELMAK
INDUSTRIAL AUTOMATION TECHNOLOGY

Elmak srl
Via Luigi Barchi 1/A - 42124 - Reggio Emilia - Italy

VIEW TYPE	Vano DIN
MACHINE NAME	PSE 5185